Instruction Manual

Designed for Elevating Machinery

FRENIC-Lift

⚠CAUTION

Thank you for purchasing our FRENIC-Lift series of inverters.

- This product is designed to drive a three-phase induction motor and synchronous motor. Read through this instruction manual and be familiar with the handling procedure for correct use.
- Improper handling might result in incorrect operation, a short life, or even a failure of this product as well as the motor.
- Deliver this manual to the end user of this product. Keep this manual in a safe place until this product is discarded.
- For how to use an option card, refer to the installation and instruction manuals for that option card.

Fuji Electric FA Components & Systems Co., Ltd. **INR-SI47-1038a-E**

Copyright © 2005 Fuji Electric FA Components & Systems Co., Ltd.

All rights reserved.

No part of this publication may be reproduced or copied without prior written permission from Fuji Electric FA Components & Systems Co., Ltd.

All products and company names mentioned in this manual are trademarks or registered trademarks of their respective holders.

The information contained herein is subject to change without prior notice for improvement.

Preface

Thank you for purchasing our FRENIC-Lift series of inverters.

FRENIC-Lift is an inverter designed to drive a three-phase induction motor (hereafter called an induction motor) and a three-phase permanent magnet synchronous motor (hereafter called a synchronous motor) for exclusively controlling elevating machinery.

Improper handling might result in incorrect operation, a short life, or even a failure of this product as well as the motor.

To drive a synchronous motor, a PG interface card option involving a pulse encoder is needed. For derails, refer to the instruction manual of PG Interface Card.

Listed below are the other materials related to the use of the FRENIC-Lift. Read them in conjunction with this manual as necessary.

- Multi-function Keypad "TP-G1-CLS" Instruction Manual (INR-SI47-1092-E)
- FRENIC-Lift Reference Manual (INR-SI47-1068-E)

The materials are subject to change without notice. Be sure to obtain the latest editions for use.

■ Safety precautions

Read this manual thoroughly before proceeding with installation, connections (wiring), operation, or maintenance and inspection. Ensure you have sound knowledge of the device and familiarize yourself with all safety information and precautions before proceeding to operate the inverter.

Safety precautions are classified into the following two categories in this manual.

⚠WARNING	Failure to heed the information indicated by this symbol may lead to dangerous conditions, possibly resulting in death or serious bodily injuries.
⚠CAUTION	Failure to heed the information indicated by this symbol may lead to dangerous conditions, possibly resulting in minor or light bodily injuries and/or substantial property damage.

Failure to heed the information contained under the CAUTION title can also result in serious consequences. These safety precautions are of utmost importance and must be observed at all times.

Application

⚠WARNING

- FRENIC-Lift is equipment designed to drive induction motors and synchronous motors for exclusively controlling elevating machinery. Do not use it for single-phase motors or for other purposes.

  Fire or accident could occur.

- FRENIC-Lift may not be used for a life-support system or other purposes directly related to the human safety.
- Though FRENIC-Lift is manufactured under strict quality control, install safety devices for applications where serious accidents or material losses are foreseen in relation to the failure of it.

  An accident could occur.

Installation

⚠WARNING

- Install the inverter on a nonflammable material such as metal.
  Otherwise fire could occur.
- Do not place flammable matter nearby.
  Doing so could cause fire.
- Using an optional DC reactor makes human body easily touch any live parts of inverters. In this case, take countermeasures such as installing the inverter in a place that easily protects human body from electric shock.
  Otherwise, electric shock or injuries could occur.

⚠CAUTION

- Do not support the inverter by its terminal block cover during transportation.
  Doing so could cause a drop of the inverter and injuries.
- Prevent lint, paper fibers, sawdust, dust, metallic chips, or other foreign materials from getting into the inverter or from accumulating on the heat sink.
  Otherwise, a fire or an accident might result.
- Do not install or operate an inverter that is damaged or lacking parts.
  Doing so could cause fire, an accident or injuries.
- Do not get on a shipping box.
- Do not stack shipping boxes higher than the indicated information printed on those boxes.
  Doing so could cause injuries.

Wiring

⚠WARNING

- When wiring the inverter to the power source, insert a recommended molded case circuit breaker (MCCB) or residual-current-operated protective device (RCD)/earth leakage circuit breaker (ELCB) (with overcurrent protection) in the path of power lines. Use the devices within the recommended current range.
- Use wires in the specified size.
  Otherwise, fire could occur.
- Do not use one multicore cable in order to connect several inverters with motors.
- Do not connect a surge killer to the inverter's output (secondary) circuit.
  Doing so could cause fire.
- Install inverters in compliance with the local regulation.
  Otherwise, electric shock or fire could occur.
- Qualified electricians should carry out wiring.
- Be sure to perform wiring after turning the power OFF.
  Otherwise, electric shock could occur.
- Be sure to perform wiring after installing the inverter body.
  Otherwise, electric shock or injuries could occur.

⚠WARNING

- Ensure that the number of input phases and the rated voltage of the product match the number of phases and the voltage of the AC power supply to which the product is to be connected.

  Otherwise fire or an accident could occur.

- Do not connect the power source wires to output terminals (U, V, and W).

  Doing so could cause fire or an accident.

- Generally, control signal wires are not enforced- insulated. If they accidentally touch any live power lines, their insulation coat may break for any reasons. In such a case, an extremely high voltage may be applied to the signal lines. Make a complete remedy to protect the signal line from contacting any live high voltage lines.

  Otherwise, an accident or electric shock could occur.

⚠CAUTION

- Wire the three-phase motor to terminals U, V, and W of the inverter, aligning phases each other.

  Otherwise injuries could occur.

- The inverter, motor and wiring generate electric noise. Take care of malfunction of the nearby sensors and devices. To prevent the motor from malfunctioning, implement noise control measures.

  Otherwise an accident could occur.

Operation

⚠WARNING

- Be sure to install the terminal block cover and the front cover before turning the power ON. Do not remove the covers while power is applied.

  Otherwise electric shock could occur.

- Do not operate switches with wet hands.

  Doing so could cause electric shock.

- If the retry function has been selected, the inverter may automatically restart and drive the motor depending on the cause of tripping.
  (Design the machinery or equipment so that human safety is ensured after restarting.)
- If the stall prevention function (current limiter), automatic deceleration, and overload prevention control have been selected, the inverter may operate at an acceleration/deceleration time or frequency different from the commanded ones. Design the machine so that safety is ensured even in such cases.

  Otherwise an accident could occur.

- If an alarm reset is made with the Run command signal turned ON, a sudden start will occur. Ensure that the Run command signal is turned OFF in advance.

  Otherwise an accident could occur.

- If you set the function codes wrongly or without completely understanding this instruction manual and the FRENIC-Lift Reference Manual (INR-SI47-1068-E), the motor may rotate with a torque or at a speed not permitted for the machine.
- In the tuning process of the inverter, no motor torque control for braking of the machinery takes effect. Tune the inverter for the motor after disconnecting it from the machinery, or after mechanically brakes the machinery. Anyway, do it after suppressing any dangerous factors.

  An accident or injuries could occur.

- Do not touch the inverter terminals while the power is applied to the inverter even if the inverter stops.

  Doing so could cause electric shock.

⚠CAUTION

- Do not turn the main circuit power (circuit breaker) ON or OFF in order to start or stop inverter operation.
  Doing so could cause failure.
- Do not touch the heat sink because they become very hot.
  Doing so could cause burns.
- Setting the inverter to high speeds is easy. Before changing the frequency (speed) setting, check the specifications of the motor and machinery.
- The brake function of the inverter does not provide mechanical holding means.
  Injuries could occur.

Setting control switches

⚠WARNING

- Before setting up any internal control switches, turn OFF the power, and wait for more than five minutes. Further, check that the LED monitor is unlit, and make sure, using a multimeter or a similar instrument, that the DC link bus voltage between the terminals P (+) and N (-) has dropped below a safe voltage (+25 VDC)**.**
  Otherwise electric shock could occur.

Maintenance and inspection, and parts replacement

⚠WARNING

- Turn the power OFF and wait for more than five minutes, before starting inspection. Further, check that the LED monitor is unlit, and check the DC link bus voltage between the P (+) and N (-) terminals to be lower than 25 VDC.
  Otherwise, electric shock could occur.
- Maintenance, inspection, and parts replacement should be made only by qualified persons.
- Take off the watch, rings and other metallic matter before starting work.
- Use insulated tools.
  Otherwise, electric shock or injuries could occur.

Disposal

⚠CAUTION

- Handle the inverter as an industrial waste when disposing of it.
  Otherwise injuries could occur.

Others

⚠WARNING

- Never attempt to modify the inverter.
  Doing so could cause electric shock or injuries.

GENERAL PRECAUTIONS

Drawings in this manual may be illustrated without covers or safety shields for explanation of detail parts. Restore the covers and shields in the original state and observe the description in the manual before starting operation.

■ Precautions for use

In running general-purpose motors	Driving a 400V general-purpose motor	When driving a 400V general-purpose motor with an inverter using extremely long wires, damage to the insulation of the motor may occur. Apply the inverter after consulting the motor maker.
	Torque characteristics and temperature rise	When the inverter is used to run a general-purpose motor, the temperature of the motor becomes higher than when it is operated using a commercial power supply. In the low-speed range, the cooling effect will be weakened, so decrease the output torque of the motor.
	Vibration	When an inverter-driven motor is mounted to a machine, resonance may be caused by the natural frequencies of the machine system. Note that operation of a 2-pole motor at 60 Hz or higher may cause abnormal vibration. * The use of a rubber coupling or vibration dampening rubber is recommended. * Run your machinery including FRENIC-Lift inverter so as to skip its resonance frequency zone/s.
	Noise	When an inverter is used with a general-purpose motor, the motor noise level is higher than that with a commercial power supply. To reduce noise, raise carrier frequency of the inverter. Operation at 60 Hz or higher can also result in higher noise level.
In running special motors	Brake motors	For motors equipped with parallel-connected brakes, their braking power must be supplied from the primary circuit. If the brake power is connected to the inverter's output circuit by mistake, the brake will not work. Do not use inverters for driving motors equipped with series-connected brakes.
	Geared motors	If the power transmission mechanism uses an oil-lubricated gearbox or speed changer/reducer, then continuous motor operation at low speed may cause poor lubrication. Avoid such operation.
	Single-phase motors	Single-phase motors are not suitable for inverter-driven variable speed operation. Use three-phase motors.
Environmental conditions	Installation location	Use the inverter within the ambient temperature range from -10 to +45°C. The heat sink and braking resistor of the inverter may become hot under certain operating conditions, so install the inverter on nonflammable material such as metal. Ensure that the installation location meets the environmental conditions specified in Chapter 2, Section 2.1 "Operating Environment."

Combination with peripheral devices	Installing an MCCB or RCD/ELCB	Install a recommended molded case circuit breaker (MCCB) or residual-current-operated protective device (RCD)/earth leakage circuit breaker (ELCB) (with overcurrent protection) in the primary circuit of the inverter to protect the wiring. Ensure that the circuit breaker capacity is equivalent to or lower than the recommended capacity.
	Installing an MC in the secondary circuit	If a magnetic contactor (MC) is mounted in the inverter's output (secondary) circuit, ensure that both the inverter and the motor are completely stopped before you turn the MC on or off. Remove a surge killer built-in the MC.
	Installing an MC in the primary circuit	Do not turn the magnetic contactor (MC) in the primary circuit ON or OFF more than once an hour as an inverter failure may result. If frequent starts or stops are required during motor operation, use ***FWD*** / ***REV*** signals.
	Protecting the motor	The electronic thermal function of the inverter can protect the motor. The operation level and the motor type (general-purpose motor, inverter motor) should be set. For high-speed motors or water-cooled motors, set a small value for the thermal time constant and protect the motor. If you connect the motor thermal relay to the motor with a long wire, a high-frequency current may flow into the wiring stray capacitance. This may cause the relay to trip at a current lower than the set value for the thermal relay. If this happens, lower the carrier frequency.
	Discontinuance of power-factor correcting capacitor	Do not mount power-factor correcting capacitors in the inverter’s primary circuit. (Use the DC reactor to improve the inverter power factor.) Do not use power-factor correcting capacitors in the inverter’s output (secondary) circuit. An overcurrent trip will occur, disabling motor operation.
	Discontinuance of surge killer	Do not connect a surge killer to the inverter's output (secondary) circuit.
	Reducing noise	Use of a filter and shielded wires is typically recommended to satisfy EMC Directives.
	Measures against surge currents	If an overvoltage trip occurs while the inverter is stopped or operated under a light load, it is assumed that the surge current is generated by open/close of the phase-advancing capacitor in the power system. * Connect a DC reactor to the inverter.
	Megger test	When checking the insulation resistance of the inverter, use a 500 V megger and follow the instructions contained in Chapter 7, Section 7.5 "Insulation Test."
Wiring	Control circuit wiring length	When using remote control, limit the wiring length between the inverter and operator box to 20 m or less and use twisted pair or shielded wire.
	Wiring length between inverter and motor	If long wiring is used between the inverter and the motor, the inverter will overheat or trip as a result of overcurrent (high-frequency current flowing into the stray capacitance) in the wires connected to the phases. Ensure that the wiring is shorter than 20 m. If this length must be exceeded, lower the carrier frequency.
	Wiring size	Select wires with a sufficient capacity by referring to the current value or recommended wire size.
	Wiring type	When several inverters drive motors, do not use one multicore cable in order to connect several inverters with motors.
	Grounding	Securely ground the inverter using the grounding terminal.

Selecting inverter capacity	Driving general-purpose motor	Select an inverter according to the applicable motor ratings listed in the standard specifications table for the inverter. When high starting torque is required or quick acceleration or deceleration is required, select an inverter with a capacity one size greater than the standard.
	Driving special motors	Select an inverter that meets the following condition: Inverter rated current > Motor rated current
Transportation and storage	When transporting or storing inverters, follow the procedures and select locations that meet the environmental conditions listed in Chapter 1, Section 1.3 "Transportation" and Section 1.4 "Storage Environment."	

How this manual is organized

This manual is made up of chapters 1 through 9.

Chapter 1 BEFORE USING THE INVERTER

This chapter describes acceptance inspection and precautions for transportation and storage of the inverter.

Chapter 2 MOUNTING AND WIRING OF THE INVERTER

This chapter provides operating environment, precautions for installing the inverter, wiring instructions for the motor and inverter.

Chapter 3 OPERATION USING THE KEYPAD

The FRENIC-Lift has no standard keypad. Operating the FRENIC-Lift from a keypad requires an optional multi-function keypad. For details in operations, refer to the Multi-function Keypad "TP-G1-CLS" Instruction Manual (INR-S147-1092-E).

Chapter 4 RUNNING THE MOTOR

This chapter describes preparation to be made before running the motor for a test and practical operation.

Chapter 5 FUNCTION CODES

This chapter provides a list of the function codes. For details of function codes, refer to the FRENIC-Lift Reference Manual (INR-S147-1068-E.)

Chapter 6 TROUBLESHOOTING

This chapter describes troubleshooting procedures to be followed when the inverter malfunctions or detects an alarm condition. In this chapter, first check whether any alarm code is displayed or not, and then proceed to the troubleshooting items.

Chapter 7 MAINTENANCE AND INSPECTION

This chapter describes inspection, measurement and insulation test which are required for safe inverter operation. It also provides information about periodical replacement parts and guarantee of the product.

Chapter 8 SPECIFICATIONS

This chapter lists specifications including output ratings, control system, external dimensions and protective functions.

Chapter 9 LIST OF PERIPHERAL EQUIPMENT AND OPTIONS

This chapter describes main peripheral equipment and options which can be connected to the FRENIC-Lift series of inverters.

Icons

The following icons are used throughout this manual.

Note This icon indicates information which, if not heeded, can result in the inverter not operating to full efficiency, as well as information concerning incorrect operations and settings which can result in accidents.

Tip This icon indicates information that can prove handy when performing certain settings or operations.

This icon indicates a reference to more detailed information.

Table of Contents

Preface i
■ Safety precautions i
■ Precautions for use v
How this manual is organized viii

Chapter 1 BEFORE USING THE INVERTER 1-1
1.1 Acceptance Inspection 1-1
1.2 External View and Terminal Blocks 1-2
1.3 Transportation 1-3
1.4 Storage Environment 1-3
1.4.1 Temporary storage 1-3
1.4.2 Long-term storage 1-3

Chapter 2 MOUNTING AND WIRING OF THE INVERTER 2-1
2.1 Operating Environment 2-1
2.2 Installing the Inverter 2-1
2.3 Wiring 2-4
2.3.1 Removing and mounting the terminal block (TB) cover and the front cover 2-4
2.3.2 Removing and retracting the cable guide plate 2-6
2.3.3 Terminal arrangement and screw specifications 2-7
2.3.4 Recommended wire sizes 2-9
2.3.5 Wiring precautions 2-10
2.3.6 Wiring for main circuit terminals and grounding terminals 2-10
2.3.7 Wiring for control circuit terminals 2-14
2.3.8 Setting up slide switches 2-23
2.4 Cautions Relating to Harmonic Component, Noise, and Leakage Current 2-24

Chapter 3 OPERATION USING THE KEYPAD 3-1

Chapter 4 RUNNING THE MOTOR 4-1
4.1 Running the Motor for a Test 4-1
4.1.1 Inspection and preparation prior to powering on 4-1
4.1.2 Turning ON power and checking 4-1
4.1.3 Preparation before running the motor for a test--Setting function code data 4-2
4.1.4 Test run 4-5
4.2 Operation 4-5

Chapter 5 FUNCTION CODES 5-1
5.1 Function Code Tables 5-1

Chapter 6 TROUBLESHOOTING 6-1
6.1 Before Proceeding with Troubleshooting 6-1
6.2 If No Alarm Code Appears on the LED Monitor 6-2
6.2.1 Motor is running abnormally 6-2
6.2.2 Problems with inverter settings 6-6
6.3 If an Alarm Code Appears on the LED Monitor 6-7
6.4 If an Abnormal Pattern Appears on the LED Monitor while No Alarm Code is Displayed 6-18

Chapter 7 MAINTENANCE AND INSPECTION 7-1
7.1 Daily Inspection 7-1
7.2 Periodic Inspection 7-1
7.3 List of Periodical Replacement Parts 7-3
7.3.1 Judgment on service life 7-3
7.4 Measurement of Electrical Amounts in Main Circuit 7-5
7.5 Insulation Test 7-6
7.6 Inquiries about Product and Guarantee 7-7

Chapter 8 SPECIFICATIONS 8-1
8.1 Standard Models 8-1
8.2 Common Specifications 8-2
8.3 Terminal Specifications 8-3
8.3.1 Terminal functions 8-3
8.3.2 In case of operation per external signal input 8-3
8.4 External Dimensions 8-5
8.4.1 Standard models 8-5
8.5 Protection Features 8-6

Chapter 9 LIST OF PERIPHERAL EQUIPMENT AND OPTIONS 9-1

Chapter 1 BEFORE USING THE INVERTER

1.1 Acceptance Inspection

Unpack the package and check that:

(1) An inverter and accessories below are contained in the package.
- Cooling fan mounting screws (5.5 to 22 kW)
- Rubber bushes for cable guide plate (5.5 to 22 kW)
- An instruction manual (this manual)

(2) The inverter has not been damaged during transportation—there should be no dents or parts missing.

(3) The inverter is the model you ordered. You can check the model name and specifications on the main nameplate. (Main and sub nameplates are attached to the inverter and are located as shown on the following page.) For the inverter whose capacity is 37 kW or above, the mass of that is printed on the nameplate.

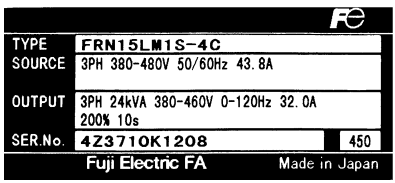

(a) Main Nameplate

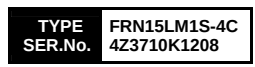

(b) Sub Nameplate

Figure 1.1 Nameplates

TYPE: Inverter model

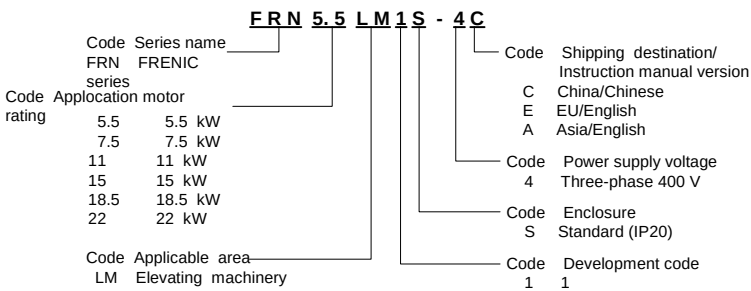

SOURCE: Number of input phases (three-phase: 3PH), input voltage, input frequency, input current

OUTPUT: Number of output phases, rated output capacity, rated output voltage, output frequency range, rated output current, overload capacity

SER. No.: Product number

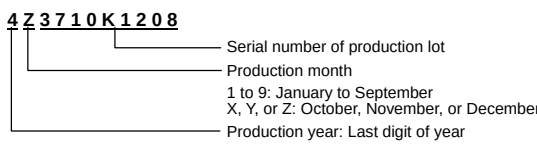

If you suspect the product is not working properly or if you have any questions about your product, contact your Fuji Electric representative.

1.2 External View and Terminal Blocks

(1) Outside and terminal block views

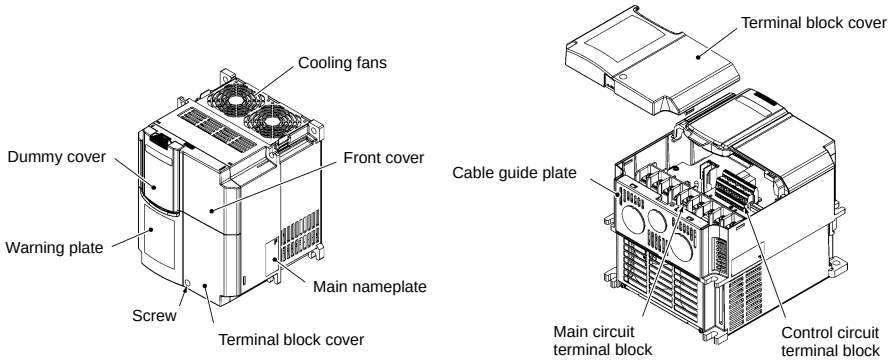

Figure 1.2 Outside and Terminal Block Views of Inverters

(2) Warning plates

Figure 1.3 Warning Plates

(3) Terminal block location

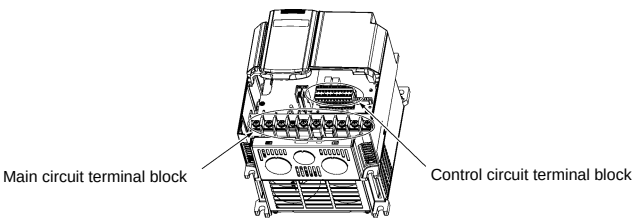

Figure 1.4 Main and Control Circuit Terminal Block Location

1.3 Transportation

- When carrying an inverter, always support its bottom at the front and rear sides with both hands. Do not hold covers or individual parts only. You may drop the inverter or break it.

1.4 Storage Environment

1.4.1 Temporary storage

Store the inverter in an environment that satisfies the requirements listed in Table 1.1.

Table 1.1 Environmental Requirements for Storage and Transportation

Item	Requirements	
Storage temperature *1	-25 to +65°C	A location where the inverter is not subject to abrupt changes in temperature that would result in the formation of condensation or ice.
Relative humidity	5 to 95% *2	
Atmosphere	The inverter must not be exposed to dust, direct sunlight, corrosive or flammable gases, oil mist, vapor, water drops or vibration. The atmosphere must contain only a low level of salt. (0.01 mg/cm^2 or less per year)	
Atmospheric pressure	86 to 106 kPa (in storage)	
	70 to 106 kPa (during transportation)	

*1 Assuming a comparatively short storage period (e.g., during transportation or the like).
*2 Even if the humidity is within the specified requirements, avoid such places where the inverter will be subjected to sudden changes in temperature that will cause condensation to form.

Precautions for temporary storage

(1) Do not leave the inverter directly on the floor.

(2) If the environment does not satisfy the specified requirements, wrap the inverter in an airtight vinyl sheet or the like for storage.

(3) If the inverter is to be stored in an environment with a high level of humidity, put a drying agent (such as silica gel) in the airtight package described in item (2).

1.4.2 Long-term storage

The long-term storage methods for the inverter vary largely according to the environment of the storage site. General storage methods are described below.

(1) The storage site must satisfy the requirements specified for temporary storage.
However, for storage exceeding three months, the ambient temperature should be within the range from -10 to +30 °C. This is to prevent the electrolytic capacitors in the inverter from deteriorating.

(2) The inverter must be stored in a package that is airtight to protect it from moisture. Include a drying agent inside the package to maintain the relative humidity inside the package to within 70%.

(3) If the inverter has been installed in the equipment or control board at a construction site where it may be subjected to humidity, dust or dirt, then remove the inverter and store it in a suitable environment specified in Table 1.1.

Precautions for storage over 1 year

If the inverter will not be powered on for a long time, the property of the electrolytic capacitors may deteriorate. Power the inverters on once a year and keep them on for 30 to 60 minutes. Do not connect the inverters to motors or run the motor.

Chapter 2 MOUNTING AND WIRING OF THE INVERTER

2.1 Operating Environment

Install the inverter in an environment that satisfies the requirements listed in Table 2.1.

Table 2.1 Environmental Requirements

Item	Specifications	
Site location	Indoors	
Ambient temperature	-10 to +45°C	
Relative humidity	5 to 95% (No condensation)	
Atmosphere	The inverter must not be exposed to dust, direct sunlight, corrosive gases, flammable gas, oil mist, vapor or water drops. (Note 1) The atmosphere must contain only a low level of salt. (0.01 mg/cm^2 or less per year) The inverter must not be subjected to sudden changes in temperature that will cause condensation to form.	
Altitude	1,000 m max. (Note 2)	
Atmospheric pressure	86 to 106 kPa	
Vibration	3 mm (Max. amplitude)	2 to less than 9 Hz
	9.8 m/s^2	9 to less than 20 Hz
	2 m/s^2	20 to less than 55 Hz
	1 m/s^2	55 to less than 200 Hz

Table 2.2 Output Current Derating Factor in Relation to Altitude

Altitude	Output current derating factor
1000 m or lower	1.00
1000 to 1500 m	0.97
1500 to 2000 m	0.95
2000 to 2500 m	0.91
2500 to 3000 m	0.88

(Note 1) Do not install the inverter in an environment where it may be exposed to cotton waste or moist dust or dirt which will clog the heat sink in the inverter. If the inverter is to be used in such an environment, install it in the enclosure of your system or other dustproof containers.

(Note 2) If you use the inverter in an altitude above 1000 m, you should apply an output current derating factor as listed in Table 2.2.

2.2 Installing the Inverter

(1) Mounting base

The temperature of the heat sink will rise up to approx. 90°C during operation of the inverter, so the inverter should be mounted on a base made of material that can withstand temperatures of this level.

⚠WARNING

Install the inverter on a base constructed from metal or other non-flammable material.

A fire may result with other material.

(2) Clearances

Ensure that the minimum clearances indicated in Figure 2.1 are maintained at all times. When installing the inverter in the enclosure of your system, take extra care with ventilation inside the enclosure as the temperature around the inverter will tend to increase. Do not install the inverter in a small enclosure with poor ventilation.

Further, do not install two or more inverters in single equipment or in an enclosure.

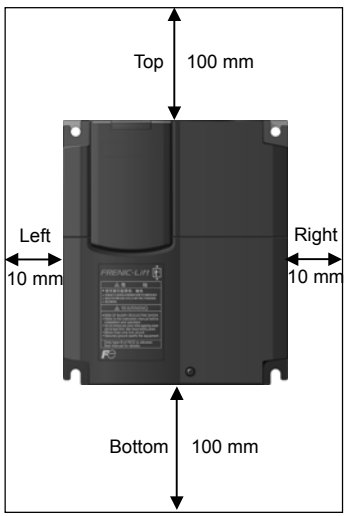

Figure 2.1 Mounting Direction and Required Clearances

■ **When employing external cooling**

As factory shipment, the cooling unit will be placed inside your equipment or enclosure so that cooling is done all internally. To improve cooling efficiency, you can take the heat sink cooling unit out of the inverter's enclosure or the equipment (as shown on the right) so that cooling is done both internally and externally (this is called "external cooling"). In external cooling, the heat sink, which removes about 70% of the total heat dissipation (total loss generated) into air, is situated outside the equipment or the enclosure. As a result, much less heat is radiated inside the inverter.

To take advantage of external cooling, you need to use the external cooling attachment option for inverters.

Do not, however, use external cooling (take the cooling unit half way out of the inverter or the control panel) in an environment with high humidity or a lot of fibrous dust, which tends to clog the heat sink.

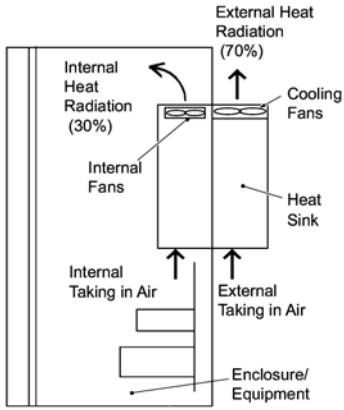

Figure 2.2 External Cooling

For details, refer to the Mounting Adapter for External Cooling "PB-F1" Installation Manual (INR-SI47-0880).

⚠CAUTION

Prevent lint, paper fibers, sawdust, dust, metallic chips, or other foreign materials from getting into the inverter or from accumulating on the heat sink.

This may result in a fire or accident.

(3) Mounting direction

Horizontal layout is recommended when two or more inverters are to be installed in an equipment or enclosure. As long as the ambient temperature is 40°C or lower, inverters may be mounted side-by-side without any gap between them. If it is necessary to mount the inverters vertically, install a partition plate or the like between the inverters so that any heat radiating from an inverter will not affect the one/s above.

Note Do not mount the inverter upside down or horizontally. Doing so will reduce the heat dissipation efficiency of the inverter and cause the overheat protection function to operate, so the inverter will not run.

(4) Solving abnormal vibration after installation

If any vibration in the surroundings reaches the inverter and causes abnormal vibration to the cooling fan(s) or the keypad, fix them firmly using the fixing screws provided as accessories.

■ Fixing the cooling fan(s)

Table 2.3 Fixing Screws

Power supply voltage	Applicable motor rating (kW)	Inverter type	Screw size (accessory)	Tightening torque (N·m)	Refer to:
Three-phase 400 V	5.5	FRN5.5LM1S-4□	M4x35 (4 pcs)	0.8	Figure A
	7.5	FRN7.5LM1S-4□			
	11	FRN11LM1S-4□			
	15	FRN15LM1S-4□	M4x50 (2 pcs)	0.8	Figure B
	18.5	FRN18.5LM1S-4□			
	22	FRN22LM1S-4□			

Note A box (□) in the above table replaces C, E or A depending on the shipping destination.

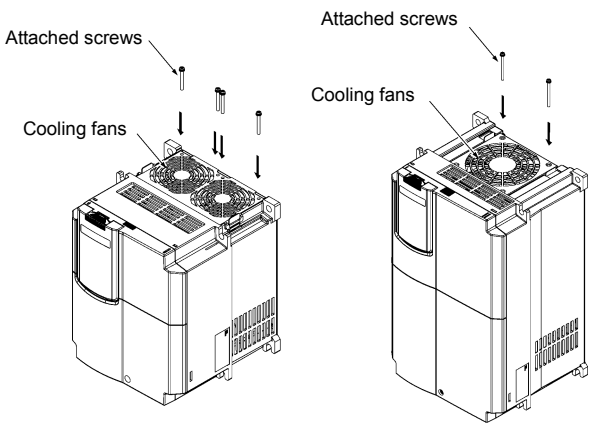

Figure A Figure B

Figure 2.3 Fixing the Cooling Fan(s)

2.3 Wiring

Follow the procedure below. (In the following description, the inverter has already been installed.)

2.3.1 Removing and mounting the terminal block (TB) cover and the front cover

■ Removing the covers

1) To remove the TB cover, loosen the fastening screw on it, hold the dimple (labeled “PULL”), and pull it up toward you.
2) To remove the front cover, hold it with both hands, slide it downward, disengage the latch at the top from the inverter, tilt the front cover toward you, and pull it upward.

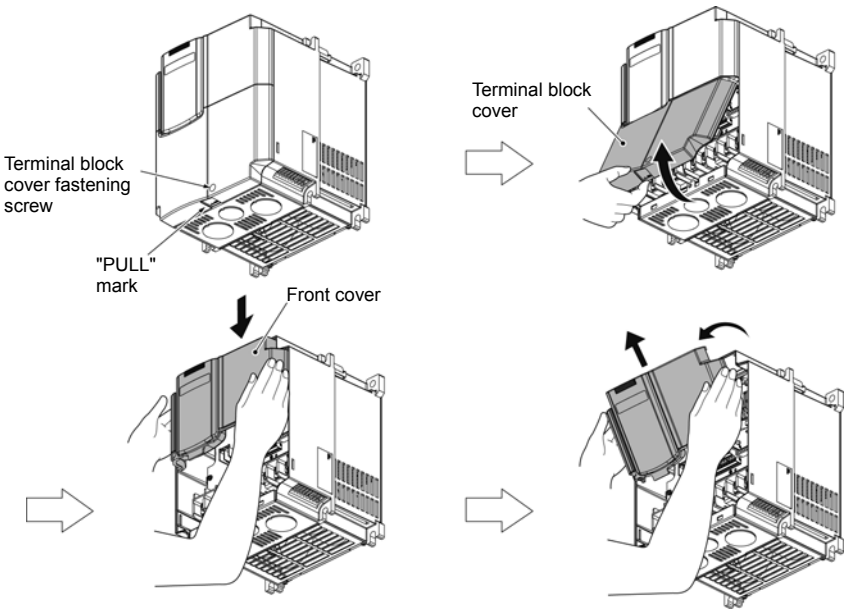

Figure 2.4 Removing the Covers

■ Mounting the covers

① Put the front cover to the inverter case so that its bottom engages with the hinges provided on both sides of the case. Push the front cover against the case of the inverter and slide it upward until the latch at its top engages with the case.

② Mount the TB cover onto the case of the inverter so that the latch at the top of the TB cover engages with a hole provided at the bottom of the front cover.

③ Tighten the screw on the TB cover (Tightening torque: 1.8 N·m).

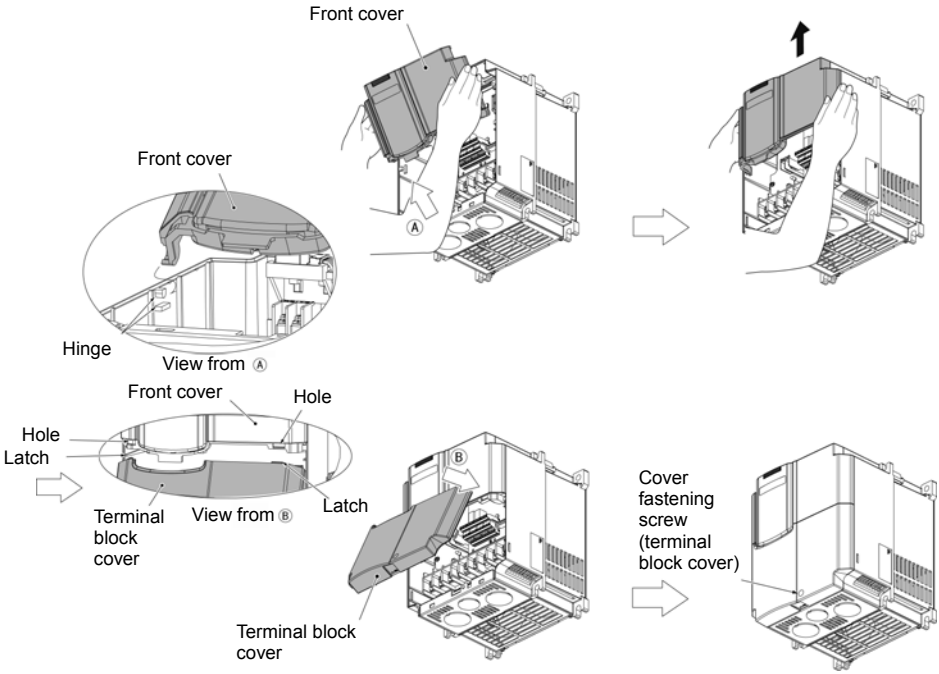

Figure 2.5 Mounting the Covers

2.3.2 Removing and retracting the cable guide plate

To secure the protective structure IP20, FRENIC-Lift builds in the cable guide plate for external wiring connections. To use it follow the steps listed below.

■ Removing the cable guide plate

Before to proceed, remove the terminal block cover as shown below left.

Loosen and remove the screw fastening the cable guide plate, and pull the plate remove.

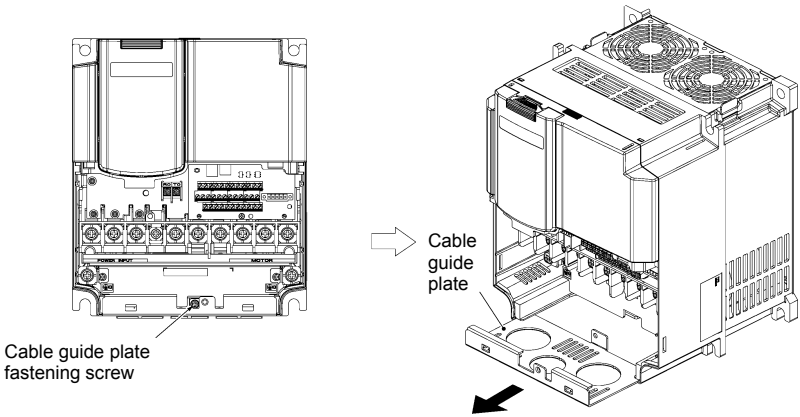

Figure 2.6 Removing the Cable Guide Plate

■ Opening half-punched holes and mounting rubber bushes

① Tap an inside face of the half-punched hole by using a screwdriver grip end or the like to punch it out. Punch out all 3 holes.

Note Be careful not to injure yourself by sharp cutting edges of parts.

② Set 3 attached rubber bushes in the holes and cut in them by a cutting tool to make cut-outs as shown below. All cables of an inverter should pass through any of cut-outs

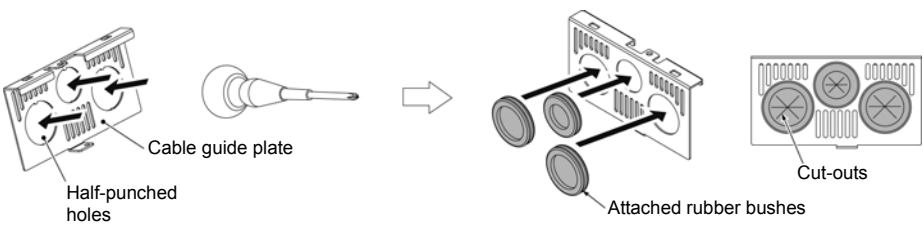

Figure 2.7 Punching out the Holes and Mounting the Rubber Bushes

⚠WARNING
Be sure to use the rubber bushes. If not, a sharp cutting edge of the cable guide plate hole may damage the cable sheath. This may induce a short-circuit fault or ground fault. **A fire or an accident may be caused.**

■ Retracting the cable guide plate

Retract the cable guide plate following the steps illustrated in Figure 2.6 in reverse. (Tightening torque: 1.8 N•m)

2.3.3 Terminal arrangement and screw specifications

The figures below show the arrangement of the main and control circuit terminals which differs according to inverter type. The two terminals prepared for grounding, which are indicated by the symbol ⏚G in Figures A to J, make no distinction between the power supply side (primary circuit) and the motor side (secondary circuit).

(1) Arrangement of the main circuit terminals

Table 2.4 Main Circuit Terminals

Power supply voltage	Applicable motor rating (kW)	Inverter type	Terminal screw size	Tightening torque (N·m)	Grounding screw size	Tightening torque (N·m)	Refer to:
Three-phase 400 V	5.5	FRN5.5LM1S-4☐	M5	3.8	M5	3.8	Figure A
	7.5	FRN7.5LM1S-4☐					
	11	FRN11LM1S-4☐	M6	5.8	M6	5.8	
	15	FRN15LM1S-4☐					Figure B
	18.5	FRN18.5LM1S-4☐					
	22	FRN22LM1S-4☐					

Terminal R0, T0 (Common to all types): Screw size M3.5, Tightening torque 1.2 (N·m)

Note A box (☐) in the above table replaces C, E or A depending on the shipping destination.

Terminal board illustrated in Figure B has a two-tired structure. Take an attention for this structure to connect wires to main input (primary) output (secondary) terminals.

Figure A

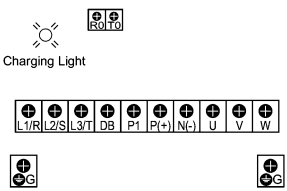

Figure B

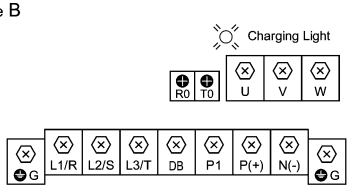

(2) The control circuit terminals (common to all models)

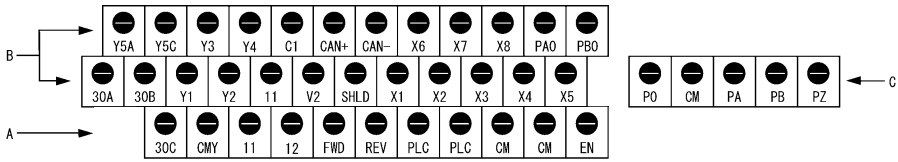

Screw size: M3
Tightening torque: 0.5 to 0.7 (N·m)

Screw size: M2
Tightening torque: 0.22 to 0.25 (N·m)

Table 2.5 Control Circuit Terminals

Terminal group	Screwdriver to be used (Head style)	Allowable wire size	Bared wire length	Dimension of openings in the control circuit terminals for post terminals*
A	Flat head (0.6 mm x 3.5 mm)	AWG26 to AWG16 (0.14 to 1.5 mm^2)	6 mm	2.51 mm (W) x 1.76 mm (H)
B	Flat head (0.6 mm x 3.5 mm)	AWG26 to AWG16 (0.14 to 1.5 mm^2)	7 mm	2.51 mm (W) x 1.76 mm (H)
C	Flat head (0.4 mm x 2.5 mm)	AWG28 to AWG16 (0.08 to 1.5 mm^2)	7 mm	1.72 mm (W) x 2.7 mm (H)

* Manufacturer of post terminals: Phoenix Contact Inc. Refer to Table 2.6.

Table 2.6 Recommended Post Terminals

Screw size	Type	
	With insulated collar	Without insulated collar
AWG24 (0.25mm^2)	AI0.25-6BU	-
AWG22 (0.34mm^2)	AI0.34-6TQ	A0.34-7
AWG20 (0.5mm^2)	AI0.5-6WH	A0.5-6
AWG18 (0.75mm^2)	AI0.75-6GY	A0.75-6
AWG16 (1.25mm^2)	AI1.5-6BK	A1.5-7

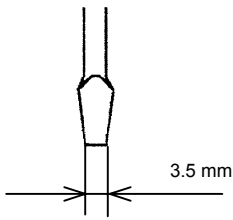

Head thickness: 0.6 mm
Screwdriver head style

2.3.4 Recommended wire sizes

Table 2.7 lists the recommended wire sizes. The recommended wire sizes for the main circuits are examples of using HIV single wire (for 75°C) at an ambient temperature of 50°C.

Table 2.7 Recommended Wire Sizes

<table>
<tr><th rowspan="4">Power supply voltage</th><th rowspan="4">Appli-cable motor rating (kW)</th><th rowspan="4">Inverter type</th><th colspan="8">Recommended wire size (mm^2) *1</th></tr>
<tr><th colspan="7">Main circuit</th><th rowspan="3">Control circuit</th></tr>
<tr><th colspan="2">Main circuit power input (L1/R, L2/S, L3/T)</th><th rowspan="2">Grounding [⏚G]</th><th rowspan="2">Inverter output [U, V, W]</th><th rowspan="2">Auxiliary Power Input (Ctrl. cct.) [R0, T0]</th><th rowspan="2">Braking resistor [DB]</th><th rowspan="2">DCR [P1, P (+)]</th></tr>
<tr><th>w/ DCR</th><th>w/ DCR</th></tr>
<tr><td rowspan="6">Three-phase 400 V</td><td>5.5</td><td>FRN5.5LM1S-4☐</td><td rowspan="3">2</td><td>2</td><td>2</td><td rowspan="3">2</td><td rowspan="6">2</td><td rowspan="6">2</td><td rowspan="3">2</td><td rowspan="6">1.25</td></tr>
<tr><td>7.5</td><td>FRN7.5LM1S-4☐</td><td></td><td rowspan="3">3.5</td></tr>
<tr><td>11</td><td>FRN11LM1S-4☐</td><td>3.5</td></tr>
<tr><td>15</td><td>FRN15LM1S-4☐</td><td>3.5</td><td>5.5</td><td>3.5</td><td rowspan="2">5.5</td></tr>
<tr><td>18.5</td><td>FRN18.5LM1S-4☐</td><td rowspan="2">5.5</td><td rowspan="2">8</td><td rowspan="2">5.5</td><td>5.5</td></tr>
<tr><td>22</td><td>FRN22LM1S-4☐</td><td>8</td><td>8</td></tr>
</table>

DCR: DC reactor

*1 Use the terminal crimp with an insulation sheath or with processing by the insulation tube. Use the wire of 75°C, 600 V, HIV-insulated. This selection assumes the inverter is used in ambient temperature at 50°C.

Note A box (☐) in the above table replaces C, E or A depending on the shipping destination.

2.3.5 Wiring precautions

Follow the rules below when performing wiring for the inverter.

(1) Make sure that the source voltage is within the rated voltage range specified on the nameplate.

(2) Be sure to connect the three-phase power wires to the main circuit power input terminals L1/R, L2/S and L3/T of the inverter. If the power wires are connected to other terminals, the inverter will be damaged when the power is turned on.

(3) Always connect the grounding terminal to prevent electric shock, fire or other disasters and to reduce electric noise.

(4) Use crimp terminals covered with insulated sleeves for the main circuit terminal wiring to ensure a reliable connection.

(5) Keep the power supply wiring (primary circuit) and motor wiring (secondary circuit) of the main circuit, and control circuit wiring as far away as possible from each other.

⚠ WARNING

- When wiring the inverter to the power source, insert a recommended molded case circuit breaker (MCCB) or earth leakage circuit breaker (ELCB) (with overcurrent protection) in the path of each pair of power lines to inverters. Use the devices recommended ones within the related current range.
- Use wires in the specified size.
- Tighten terminals with recommended torque.
  Otherwise, fire could occur.

- Use a multi-core power cable (3- or 4-wires) to wire the inverter with a motor.
- Do not connect a surge killer to the inverter's output circuit.
  Doing so could cause fire.

- According to the input power series install FRENIC-Lift in compliance with local regulations.
  Otherwise, electric shock or fire could occur.

- Qualified electricians should carry out wiring.
- Be sure to perform wiring after turning the power off.
  Otherwise, electric shock could occur.

- Be sure to perform wiring after installing the inverter.
  Otherwise, electric shock or injuries could occur.

- Ensure that the number of input phases and the rated voltage of the product match the number of phases and the voltage of the AC power supply to which the product is to be connected.
- Do not connect the power source wires to output terminals (U, V, and W).
  Doing so could cause fire or an accident.

2.3.6 Wiring for main circuit terminals and grounding terminals

Table 2.8 shows the main circuit power terminals and grounding terminals.

Table 2.8 Symbols, Names and Functions of the Main Circuit Power Terminals

Symbol	Name	Functions
L1/R, L2/S, L3/T	Main power inputs	Connect the 3-phase input power lines.
U, V, W	Inverter outputs	Connect a 3-phase motor.
R0, T0	Auxiliary power input for the control circuit	For a backup of the control circuit power supply, connect AC power lines same as that of the main power input.
P1, P(+)	DC reactor connection	Connect a DC reactor (DCR) for improving power factor.
P(+), N(-)	DC link bus	Connect an optional regenerative converter or the equivalent.
P(+), DB	Braking resistor connection	Connect a braking resistor.
⏚G × 2	Grounding for inverter and motor	Grounding terminals for the inverter's chassis (or case) and motor. Earth one of the terminals and connect the grounding terminal of the motor. Inverters provide a pair of grounding terminals that function equivalently.

Follow the procedure below for wiring and configuration of the inverter. Figure 2.8 illustrates the wiring procedure with peripheral equipment.

Wiring procedure

① Grounding terminals (⏚G)
② Inverter output terminals (U, V, W, and ⏚G)
③ DC reactor connection terminals (P1 and P(+))*
④ DC link bus terminals (P(+) and N(-))*
⑤ Main circuit power input terminals (L1/R, L2/S and L3/T)
⑥ Auxiliary power input terminals for the control circuit (R0 and T0)*
⑦ Braking resistor connection terminals (P(+) and DB)

* Perform wiring as necessary

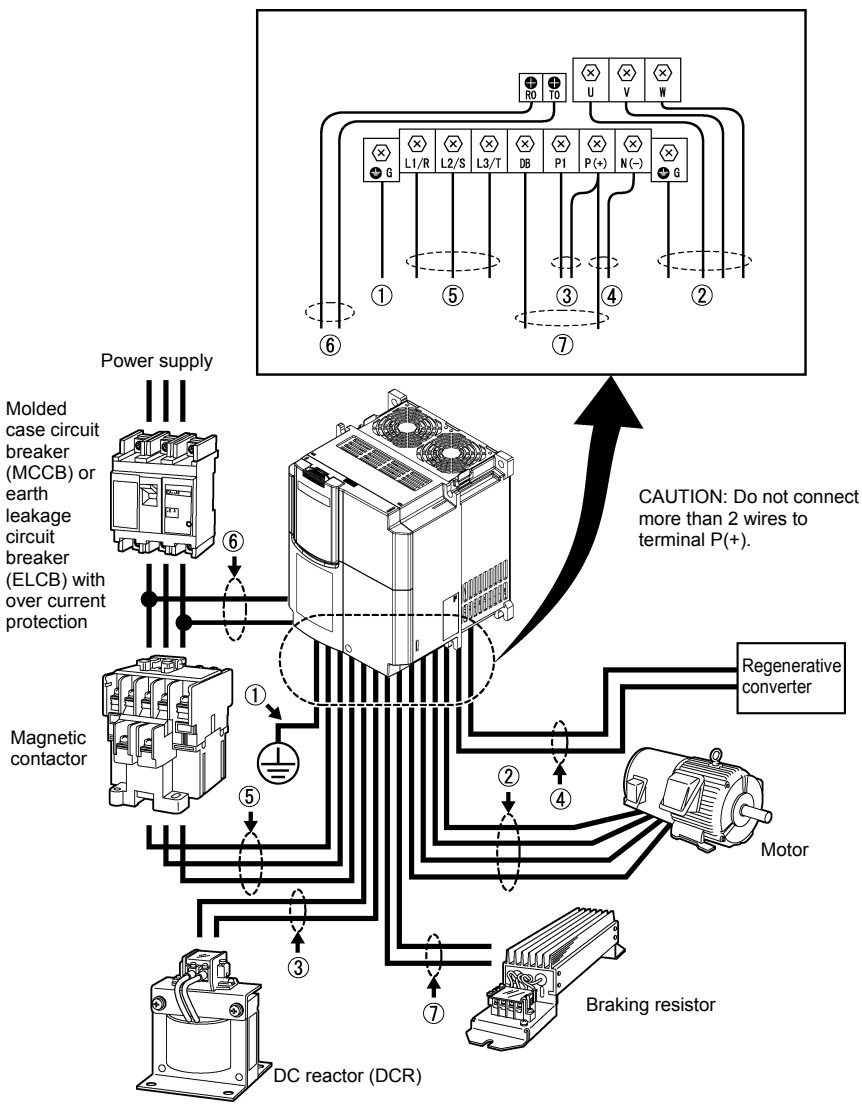

Figure 2.8 Wiring Procedure for Peripheral Equipment

① Grounding terminals (⏚G)

Be sure to ground either of the two grounding terminals for safety and noise reduction.

Install FRENIC-Lift in compliance with the local regulations, Described below for an example, a procedure shows an installation of the inverter in compliance with regulations in Japan.

E.g. grounding terminals should be grounded as follows:

1) Connect the grounding terminal of the 400 V series of inverters to a ground electrode on which class C grounding work has been completed, with conformity to the Electric Facility Technical Standard.
2) Connect a thick grounding wire with a large surface area and which meets the grounding resistance requirements listed in Table 2.9. Keep the wiring length as short as possible.

Table 2.9 Grounding Stipulated in the Electric Facility Technical Standard

Supply voltage	Grounding work class	Grounding resistance
3-phase 400 V	Class C	10 Ω or less

② Inverter output terminals, U, V, W and grounding terminals (⏚G)

Inverter's output terminals should be connected as follows:

1) Connect the three wires of the 3-phase motor to terminals U, V, and W, aligning phases each other.
2) Connect the secondary grounding wire to the grounding terminal (⏚G).

Note

- The wiring length between the inverter and motor should not exceed 50 m, when they are connected directly.
- Do not connect a power factor correcting capacitor or surge absorber to the inverter's output lines (secondary circuit).
- If the wiring length is long, the stray capacitance between the wires will increase, resulting in an outflow of the leakage current. It will activate the overcurrent protection, increase the leakage current, or will not assure the accuracy of the current display. In the worst case, the inverter could be damaged.
- Do not drive two or more motors by single inverter.

Note

Driving 400 V series motor

- If a thermal relay is installed in the path between the inverter and the motor to protect the motor from overheating, the thermal relay may malfunction even with a wiring length shorter than 50 m. In this situation, lower the carrier frequency (Function code F26: Motor sound (Carrier frequency)).
- When a PWM-type inverter is driving a motor surge voltage that is generated by switching the inverter component may be superimposed on the inverter output and may be applied to the motor terminals. Particularly if the wiring length is long, the surge voltage may deteriorate the insulation resistance of the motor. Consider any of the following measures.
  - Use a motor with insulation that withstands the surge voltage.
  - Minimize the wiring length between the inverter and motor.

③ DC reactor terminals, P1 and P (+)

1) Remove the short bar from terminals P1 and P(+).
2) Connect a DC reactor (option) to terminals P1 and P(+).

Note

- The wiring length should be 10 m or below.
- Do not remove the short bar installed across P1 and P(+) terminals if a DC reactor is not to be used.

④ DC link bus terminals, P (+) and N (-)

These are provided for the DC link bus powered system. Connect these terminals with terminals P(+) and N (-) of an optional regenerative converter or the equivalent.

Note Consult your Fuji Electric representative if these terminals are to be used.

⑤ Main circuit power input terminals, L1/R, L2/S, and L3/T (three-phase input)

1) For safety, make sure that the molded case circuit breaker (MCCB) or magnetic contactor (MC) is turned off before wiring the main circuit power input terminals.
2) Connect the main circuit power supply wires (L1/R, L2/S and L3/T) to the input terminals of the inverter via an MCCB or residual-current-operated protective device (RCD)/earth leakage circuit breaker (ELCB)*, and MC if necessary.

   It is not necessary to align phases of the power supply wires and the input terminals of the inverter with each other.

   * With overcurrent protection

Tip It is recommended that a magnetic contactor be inserted that can be manually activated. This is to allow you to disconnect the inverter from the power supply in an emergency (e.g., when the protective function is activated) so as to prevent a failure or accident from causing the secondary problems.

⑥ Auxiliary power input terminals R0 and T0 for the control circuit

In general, the inverter will run normally without power supplied to the auxiliary power input for the control circuit. However, if you share the input power for the control circuit with that for the main circuit, you would be lost when, in the event of an error or alarm, you turn OFF the magnetic contactor between the inverter and the commercial power supply. If the magnetic contactor is turned OFF, the input power to the control circuit is shut OFF, causing the alarm signals (30A/B/C) to be lost and the display on the keypad to disappear. To secure input power to the control circuit at all times, supply the power from the primary side of the magnetic contactor to control power auxiliary input terminals R0 and T0. The method of connecting auxiliary power input terminals for the control circuit refer to Section 2.3.8 "Setting up slide switches."

⑦ Braking resistor connection terminals, P(+) and DB

1) Connect terminals P and DB of an external braking resistor to terminals P(+) and DB on the main circuit terminal block. (For the braking resistor built-in type, refer to the next page.)
2) When using an external braking resistor, arrange the inverter and braking resistor to keep the wiring length to 5 m or less and twist the two wires or route them together in parallel.

⚠ WARNING

Never insert a braking resistor between terminals P(+) and N(-), P1 and N(-), P(+) and P1, DB and N(-), or P1 and DB.

Doing so could cause fire.

2.3.7 Wiring for control circuit terminals

⚠WARNING

In general, sheaths and covers of the control signal cables and wires are not specifically designed to withstand a high electric field (i.e., reinforced insulation is not applied). Therefore, if a control signal cable or wire comes into direct contact with a live conductor of the main circuit, the insulation of the sheath or the cover might break down, which would expose the signal wire to a high voltage of the main circuit. Make sure that the control signal cables and wires will not come into contact with live conductors of the main circuit.

Failure to observe these precautions could cause electric shock and/or an accident.

⚠CAUTION

Noise may be emitted from the inverter, motor and wires.

Implement appropriate measure to prevent the nearby sensors and devices from malfunctioning due to such noise.

An accident could occur.

Table 2.10 lists the symbols, names and functions of the control circuit terminals. The wiring to the control circuit terminals differs depending upon the setting of the function codes, which reflects the use of the inverter.

Table 2.10 Symbols, Names and Functions of the Control Circuit Terminals

Classifi-cation	Symbol	Name	Functions
Analog input	[12]	Voltage input	(1) The reference speed (frequency) follows the input voltage level on terminal [12]. - 0 to ±10 VDC/0 to ±100 (%) - Definition of 100%: Maximum speed (F03) (2) The reference torque bias follows the input voltage level on terminal [12]. - 0 to ±10 VDC/0 to ±100 (%) - Definition of the 100% torque bias: Rated output torque of the motor (3) The reference torque current follows the input voltage level on terminal [12]. - 0 to ±10 VDC/0 to ±100 (%) - Definition of 100% torque current: Rated overcurrent of the inverter
	[C1]	Current input	(1) The reference speed (frequency) follows the input current level on terminal [C1]. - +4 to +20 mA DC/0 to 100 (%) - Definition of 100%: Maximum speed (F03) (2) The reference torque bias follows the input current level on terminal [C1]. - +4 to +20 mA DC/0 to 100 (%) - Definition of the 100% torque bias: Rated output torque of the motor (3) The reference torque current follows the input current level on terminal [C1]. - +4 to +20 mA DC/0 to 100 (%) - Definition of 100% torque current: Rated overcurrent of the inverter * Input impedance: 250 Ω * Allowable input current is +30 mA DC. If the input current exceeds +20 mA DC, the inverter will limit it at +20 mA DC.
	[V2]	Voltage input	(1) The reference speed (frequency) follows the input voltage level on terminal [V2]. - 0 to ±10 VDC/0 to ±100 (%) - Definition of 100%: Maximum speed (F03) (2) The reference torque bias follows the input voltage level on terminal [V2]. - 0 to ±10 VDC/0 to ±100 (%) - Definition of the 100% torque bias: Rated output torque of the motor (3) The reference torque current follows the input voltage level on terminal [V2]. - 0 to ±10 VDC/0 to ±100 (%) - Definition of 100% torque current: Rated overcurrent of the inverter (4) This terminal is also used to connect a PTC (Positive Temperature Coefficient) thermistor to protect the motor from an overheat failure. To do so, switch SW4 on the control PCB to PTC side. Figure shown at the right illustrates the internal circuit diagram where the slide switch SW4 (switching the input of terminal [V2] between V2 and PTC) selects PTC. For details of SW4 refer to Section 2.3.8 “Setting up slide switches.” In this case, you must change data of the function code H26. 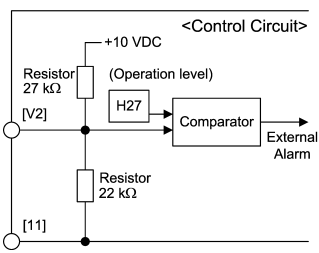 Figure 2.9 Internal Circuit Diagram (SW4 Selecting PTC) * Input impedance: 22 kΩ * Allowable input voltage is +15 VDC. If the input voltage exceeds +10 VDC, however, the inverter will limit it at +10 VDC.

Table 2.10 Continued

Classification	Symbol	Name	Functions
Analog input	[11] (Two terminals)	Analog common	Two common terminals for analog input and output signal terminals [12], [C1], and [V2]. These terminal are electrically isolated from terminals [CM]s and [CMY].

Note

- Since low level analog signals are handled, these signals are especially susceptible to the external noise effects. Route the wiring as short as possible (within 20 m) and use shielded wires. In principle, ground the shielding layer of the shielded wires; if effects of external inductive noises are considerable, connection to terminal [11] may be effective. As shown in Figure 2.10, ground the single end of the shield to enhance the shielding effect.
- Use a twin contact relay for low level signals if the relay is used in the control circuit. Do not connect the relay's contact to terminal [11].
- When the inverter is connected to an external device outputting the analog signal, a malfunction may be caused by electric noise generated by the inverter. If this happens, according to the circumstances, connect a ferrite core (a toroidal core or an equivalent) to the device outputting the analog signal and/or connect a capacitor having the good cut-off characteristics for high frequency components between control signal wires as shown in Figure 2.11.
- Do not apply a voltage of +7.5 VDC or higher to terminal [C1]. Doing so could damage the internal control circuit.

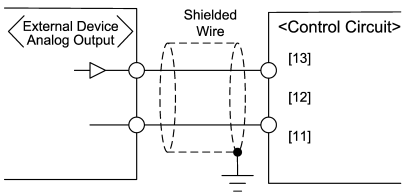

Figure 2.10 Connection of Shielded Wire

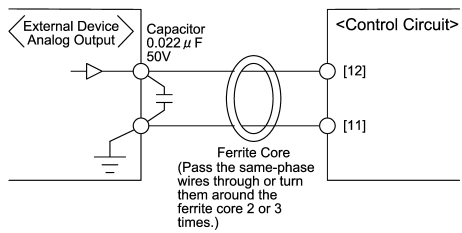

Figure 2.11 Example of Electric Noise Reduction

Table 2.10 Continued

<table>
<tr><th>Classifi-cation</th><th>Symbol</th><th>Name</th><th>Functions</th></tr>
<tr><td rowspan="11">Digital input</td><td>[X1]</td><td>Digital input 1</td><td rowspan="11">(1) The various signals such as coast-to-stop, alarm from external equipment, and multistep speed commands can be assigned to terminals [X1] to [X8], [FWD], [REV], and [EN] by setting function codes E01 to E08, E98, and E99. For details, refer to Chapter 5, Section 5.2 "Overview of Function Codes."
(2) Input mode, i.e. Sink/Source, is changeable by using the internal slide switch SW1.
(3) Switches the logic value (1/0) for ON/OFF of the terminals between [X1] to [X8], [FWD], [REV], or [EN] and [CM]. If the logic value for ON between [X1] and [CM] is 1 in the normal logic system, for example, OFF is 1 in the negative logic system and vice versa.
(4) The negative logic signaling cannot be applicable to some signals such as [FWD] and [REV].

(Digital input circuit specifications)
 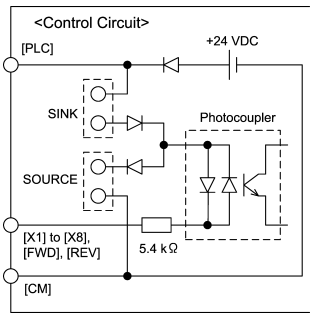

Figure 2.12 Digital Input Circuit

<table><tr><th colspan="2">Item</th><th>Min.</th><th>Max.</th></tr><tr><td rowspan="2">Operation voltage (SINK)</td><td>ON level</td><td>0 V</td><td>2 V</td></tr><tr><td>OFF level</td><td>22 V</td><td>27 V</td></tr><tr><td rowspan="2">Operation voltage (SOURCE)</td><td>ON level</td><td>22 V</td><td>27 V</td></tr><tr><td>OFF level</td><td>0 V</td><td>2 V</td></tr><tr><td colspan="2">Operation current at ON (Input voltage is at 0V)</td><td>2.5 mA</td><td>5 mA</td></tr><tr><td colspan="2">Allowable leakage current at OFF</td><td>-</td><td>0.5 mA</td></tr></table></td></tr>
<tr><td>[X2]</td><td>Digital input 2</td></tr>
<tr><td>[X3]</td><td>Digital input 3</td></tr>
<tr><td>[X4]</td><td>Digital input 4</td></tr>
<tr><td>[X5]</td><td>Digital input 5</td></tr>
<tr><td>[X6]</td><td>Digital input 6</td></tr>
<tr><td>[X7]</td><td>Digital input 7</td></tr>
<tr><td>[X8]</td><td>Digital input 9</td></tr>
<tr><td>[FWD]</td><td>Run forward command</td></tr>
<tr><td>[REV]</td><td>Run reverse command</td></tr>
<tr><td>[EN]</td><td>Enable</td><td>If this terminal signal turns off, the inverter shut its power output down to absolutely stop operation of the inverter.
 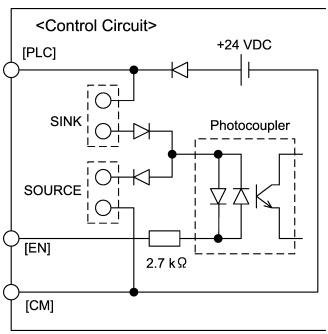

Figure 2.13 Digital Input Circuit</td></tr>
<tr><td>[PLC] (Two terminals)</td><td>PLC signal power</td><td>Connects to PLC output signal power supply.
(Rated voltage: +24 VDC: Allowable range: +22 to +27 VDC)</td></tr>
<tr><td>[CM] (Two terminals)</td><td>Digital common</td><td>Common terminals for digital input signal terminals
These terminals are electrically isolated from the terminals, [11]s and [CMY].</td></tr>
</table>

Table 2.10 Continued

Classification	Symbol	Name	Functions
Digital input			

Tip

■ **Turning on or off [X1] to [X8], [FWD], [REV], or [EN] using a relay contact**

Figure 2.14 shows two examples of a circuit that turns on or off control signal input [X1] to [X8], [FWD], [REV], or [EN] using a relay contact. In the circuit (a), the slide switch SW1 has been turned to SINK, whereas in the circuit (b) it has been turned to SOURCE.

NOTE: To configure this kind of circuit, use a highly reliable relay
(Recommended product: Fuji control relay Model HH54PW.)

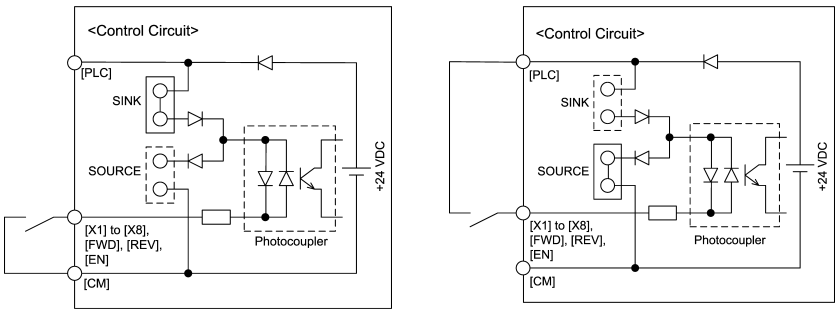

(a) With the switch turned to SINK (b) With the switch turned to SOURCE

Figure 2.14 Circuit Configuration Using a Relay Contact

■ **Turning on or off [X1] to [X8], [FWD], [REV], or [EN] using a programmable logic controller (PLC)**

Figure 2.15 shows two examples of a circuit that turns on or off control signal input [X1] to [X8], [FWD], [REV], or [EN] using a programmable logic controller (PLC). In the circuit (a), the switch SW1 has been turned to SINK, whereas in the circuit (b) it has been turned to SOURCE.

In circuit (a) below, short-circuiting or opening the transistor's open collector circuit in the PLC using an external power source turns on or off control signal [X1] to [X8], [FWD], [REV], or [EN]. When using this type of circuit, observe the following:

- Connect the + node of the external power source (which should be isolated from the PLC's power) to terminal [PLC] of the inverter.
- Do not connect terminal [CM] of the inverter to the common terminal of the PLC.

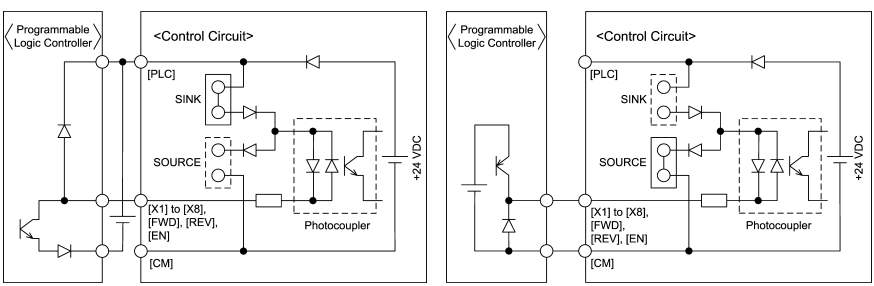

(a) With the switch turned to SINK (b) With the switch turned to SOURCE

Figure 2.15 Circuit Configuration Using a PLC

For details about the slide switch setting, refer to Section 2.3.8 “Setting up slide switches.”

Table 2.10 Continued

Classification	Symbol	Name	Functions
Transistor output	[Y1]	Transistor output 1	(1) Various signals such as inverter running, speed/freq. arrival and overload early warning can be assigned to the terminal [Y1] by setting function code E20 to E23. Refer to Chapter 5, Section 5.2 "Overview of Function Codes" for details. (2) Switches the logic value (1/0) for ON/OFF of the terminals between [Y1] to [Y4] and [CMY]. If the logic value for ON between [Y1] to [Y4] and [CMY] is 1 in the normal logic system, for example, OFF is 1 in the negative logic system and vice versa. Transistor output circuit specification
	[Y2]	Transistor output 2	
	[Y3]	Transistor output 3	
	[Y4]	Transistor output 4	
	[CMY]	Transistor output common	Common terminal for transistor output signal terminals This terminal is electrically isolated from terminals, [CM]s and [11]s.

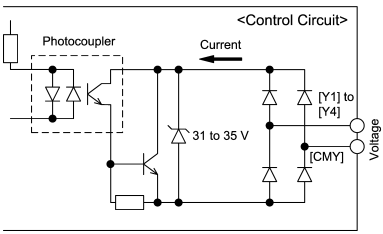

Item		Max.
Operation voltage	ON level	3 V
	OFF level	27 V
Maximum load current at ON		50 mA
Leakage current at OFF		0.1 mA

Figure 2.16 Transistor Output Circuit

Figure 2.17 shows examples of connection between the control circuit and a PLC.

Note

- Check the polarity of the external power inputs.
- When connecting a control relay, connect a surge-absorbing diode across the coil of the relay.
- When any equipment or device connected to the transistor output needs to be supplied with DC power, feed the power (+24 VDC: allowable range: +22 to +27 VDC, 50 mA max.) through the [PLC] terminal. Short-circuit between the terminals [CMY] and [CM] in this case.

Tip

■ **Connecting Programmable Controller (PLC) to Terminal [Y1], [Y2], [Y3], or [Y4]**

Figure 2.17 shows two examples of circuit connection between the transistor output of the inverter's control circuit and a PLC. In the example (a), the input circuit of the PLC serves as the sink for the control circuit output, whereas in the example (b), it serves as the source for the output.

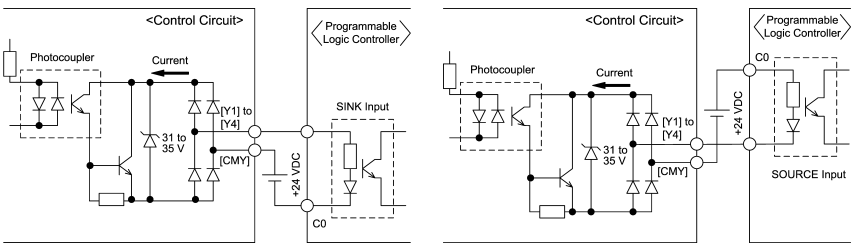

(a) PLC serving as Sink (b) PLC serving as Source

Figure 2.17 Connecting PLC to Control Circuit

Table 2.10 Continued

Classification	Symbol	Name	Functions
Pulse encoder outputs	[PAO]	A-phase pulse output	These terminals output the inputs PA and PB from the pulse encoder head-to-head in a pair of open collector outputs
	[PBO]	B-phase pulse output	

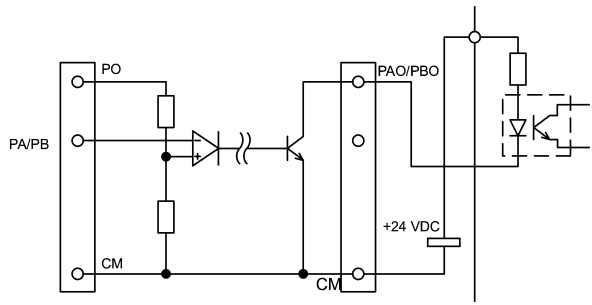

Figure 2.18 Output Circuits for the Pulse Encoder (a pair of PA/PB)

Specifications

Item	Specifications	Remarks
Terminal voltage	+27 VDC max.	Measured between terminals PA0 or PB0 and CM.
Terminal current	50mA max.	Sink current of terminals PA0 and PB0
Frequency response	25 kHz min.	
Wire length	Less than 20m	Wire length between terminals PA0/PB0 and terminals on external equipment

Note Length of the wire may affect distortion of the waveform of terminal output signals.
The lower resistance in a circuit the larger current flow there. Choose a pull-up resistor with lower resistance as possible within the allowable current limit 50 mA for a stable operation.

Classification	Symbol	Name	Functions
Pulse encoder outputs	[CM](Two terminals)	Digital common	Common terminals for digital input signals. These terminals are electrically isolated from terminals [11] and [CM]
Relay contact output	[Y5A/C]	General purpose relay output	(1) A general-purpose relay contact output usable as well as the function of the transistor output terminal [Y1], [Y2], [Y3], or [Y4]. Contact rating: 250 VAC 0.3 A, cos ϕ = 0.3, 48 VDC, 0.5 A (2) You can switch its output mode between “Active ON” (the terminals [Y5A] and [Y5C] are short-circuited if the signal is active.)” and “Active OFF” (the terminals [Y5A] and [Y5C] are open-circuited if the signal is active.).
	[30A/B/C]	Alarm relay output (for any error)	(1) Outputs a contact signal (SPDT) when a protective function has been activated to stop the motor. Contact rating: 250 VAC, 0.3A, cos ϕ = 0.3, 48 VDC, 0.5A (2) A command similar to terminals [Y1] to [Y4] can be assigned for this relay contact and use it for signal output. (3) Switching of the normal/negative logic output is applicable to the following two contact outputs: "Terminals [30A] and [30C] are short-circuited for ON signal output (Active ON)" or "the terminals [30B] and [30C] are short-circuited (non-excited) for ON signal output (Active OFF)."

Table 2.10 Continued

Classifi-cation	Symbol	Name	Functions
Communication	RJ-45 connector for the keypad	Standard RJ-45 connector	(1) Used to connect the inverter with PC or PLC using RS485 port. The inverter supplies the power to the keypad through the extension cable for keypad. (2) Remove the keypad from the standard RJ-45 connector, and connect the RS485 communications cable to control the inverter through the PC or PLC (Programmable Logic Controller). Refer to Section 2.3.8 for setting of the terminating resistor. 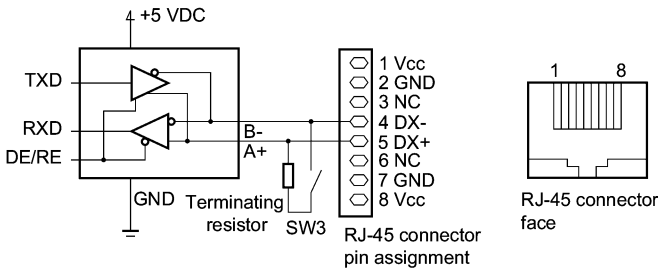 Figure 2.19 RJ-45 Connector and its Pin Assignment* * Do not use the pins 1, 2, 7, and 8 for using this connector to connect other equipment since these pins are assigned for power lines for the keypad.
	[CAN+] [CAN-]	CAN Communi-cations link input terminals	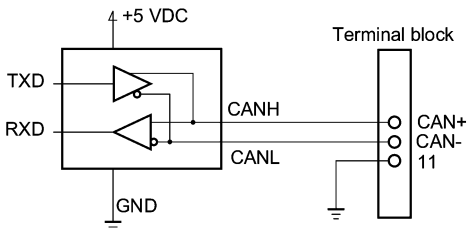 Figure 2.20 CAN Communications Interface Circuit Use terminal [11] for the grounding terminal of CAN.
	[SHLD]	Connecting shield sheath of communi-cations cable	Use this terminal to connect the shielded sheath of the CAN communications cable. This terminal is not electrically connected to internal circuits of the inverter.

Note

- Route the wiring of the control terminals as far from the wiring of the main circuit as possible. Otherwise electric noise may cause malfunctions.
- Fix the control circuit wires inside the inverter to keep them away from the live parts of the main circuit (such as the terminal block of the main circuit).

Table 2.10 Continued

<table>
<tr><th>Classifi-cation</th><th>Symbol</th><th>Name</th><th>Functions</th></tr>
<tr><td rowspan="4">Pulse encoder</td><td>[PO]</td><td>Power terminal for the pulse encoder</td><td>Use this terminal to supply a power to the pulse encoder mounted outside the inverter.
Switching the slide switch SW5 switches its output voltage between 15 VDC and 12 VDC.

<u>Specifications</u>
15V: 15 VDC ±10%, 120 mA
12V: 12 VDC ±10%, 120 mA</td></tr>
<tr><td>[PA]</td><td>Pulse encoder input A</td><td rowspan="3"> 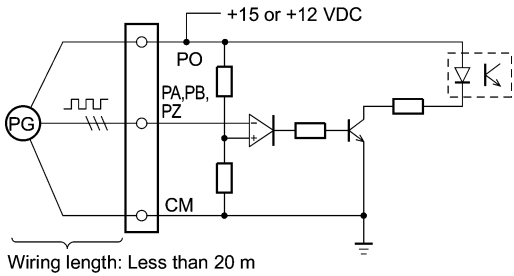

Figure 2.21 Pulse Encoder Input Circuits

<u>Specifications</u>
<table>
<tr><th>Item</th><th colspan="2">Specifications</th></tr>
<tr><td>Pulse encoder output circuits</td><td>Open collector transistor</td><td>Complementary transistor</td></tr>
<tr><td>Allowable input pulse frequency (rate)</td><td>25 kHz max.</td><td>100 kHz max.</td></tr>
<tr><td>Wiring length</td><td colspan="2">Less than 20 m</td></tr>
</table></td></tr>
<tr><td>[PB]</td><td>Pulse encoder input B</td></tr>
<tr><td>[PZ]</td><td>Pulse encoder input Z</td></tr>
<tr><td>[CM]</td><td>Pulse encoder common terminal</td><td>Located on the encoder terminal block is the common (grounding) terminal for the pulse encoder.</td></tr>
</table>

Note

- Route the wiring of the control terminals as far from the wiring of the main circuit as possible. Otherwise electric noise may cause malfunctions.
- Secure the control circuit wires the inside wall of the inverter to keep them away from the live parts of the main circuit (such as the terminal block of the main circuit).

2.3.8 Setting up slide switches

⚠WARNING

Before setting up any internal control switches, turn OFF the power, and wait for more than five minutes. Further, check that the charge lamp is unlit, and make sure that the DC link bus voltage between the terminals P(+) and N(-) has dropped below a safe voltage (+25 VDC) using a multimeter or a similar instrument**.**

An electric shock may result if this warning is not heeded as there may be some residual electric charge in the DC link bus capacitor even after the power has been turned off.

■ Setting up the slide switches

To switch the slide switches, remove the front and terminal block covers, so that you can access the control PCB that contains the switches.

📖 For details of removing the front cover, terminal block cover, and dummy cover, refer to Section 2.3.1 “Removing and mounting the terminal block (TB) cover and the front cover.”

Table 2.11 lists function of each slide switch.

Table 2.11 Function of Each Slide Switch

<table>
<tr><th>Switch</th><th>Function</th></tr>
<tr><td>① SW1</td><td>Switches service mode of the digital input terminals for SINK or SOURCE.
▪ To make the digital input terminal [X1] to [X8], [FWD], [REV], or [EN] serve as a current sink, switch SW1 to SINK.
▪ To make them serve as a current source, to SOURCE.</td></tr>
<tr><td>② SW3</td><td>Switches on/off the terminating resistor of RS485 communications port of the inverter.
▪ To connect a keypad to the inverter switch SW3 to OFF (Factory defaults.)
▪ If the inverter is connected to the RS485 communications network as a termination device, switch it to ON.</td></tr>
<tr><td>③ SW4</td><td>Switches property of the analog input terminal V2 for V2 or PTC.
When switching this switch, change data of the function code H26.
<table>
<tr><th></th><th>Switch SW4 to:</th><th>Set data of H26 to:</th></tr>
<tr><td>Analog speed command source in voltage
(Factory defaults)</td><td>V2</td><td>0</td></tr>
<tr><td>PTC thermistor input</td><td>PTC</td><td>1 or 2</td></tr>
</table></td></tr>
<tr><td>④ SW5</td><td>Switches the voltage of the power source to the pulse encoder between 12 VDC and 15 VDC (Factory defaults: 12 VDC.)</td></tr>
</table>

Figure 2.22 shows location of the configuration slide switches.

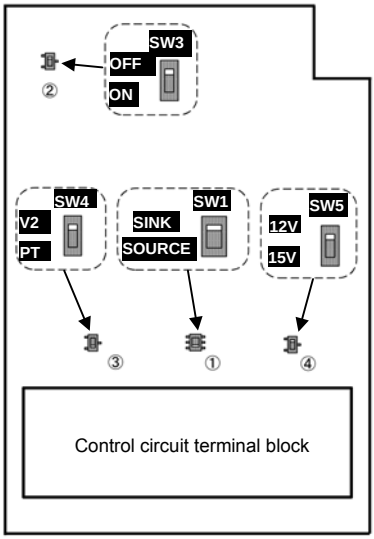

Switching example

SW1

SINK	SOURCE
SINK	SOURCE

Figure 2.22 Location of the Slide Switches

2.4 Cautions Relating to Harmonic Component, Noise, and Leakage Current

(1) Harmonic component

Input current to an inverter includes harmonic components, which may affect other loads and power factor correcting capacitors that are connected to the same power source as the inverter. If harmonic components cause any problems, connect a DC reactor (option) to the inverter. It may also be necessary to connect an AC reactor serially to the power factor correcting capacitors.

(2) Noise

If noise generated from the inverter affects other devices, or that generated from peripheral equipment causes the inverter to malfunction, follow the basic measures outlined below.

1) If noise generated from the inverter affects the other devices through power wires or grounding wires:
   - Isolate the grounded metal frames of the inverter from those of the other devices.
   - Connect a noise filter to the inverter power wires.
   - Isolate the power system of the other devices from that of the inverter with an insulated transformer.

2) If induction or radio noise generated from the inverter affects other devices through power wires or grounding wires:
   - Isolate the main circuit wires from the control circuit wires and other device wires.
   - Put the main circuit wires through a metal conduit and connect the pipe to the ground near the inverter.
   - Install the inverter onto the metal switchboard and connect the whole board to the ground.
   - Connect a noise filter to the inverter power wires.

3) When implementing measures against noise generated from peripheral equipment:
   - For the control signal wires, use twisted or shielded-twisted wires. When using shielded-twisted wires, connect the wire sheath shield to the common terminals of the control circuit or ground.
   - Connect a surge absorber in parallel with a coil or solenoid of the magnetic contactor.

(3) Leakage current

Harmonic component current generated by insulated gate bipolar transistors (IGBTs) switching on/off inside the inverter becomes leakage current through stray capacitors of inverter input and output wires or a motor. If any of the problems listed below occur, take an appropriate measure against them.

Table 2.12 Leakage Current Countermeasures

Problem	Measures
An earth leakage circuit breaker* that is connected to the input (primary) has tripped. * With overcurrent protection	1) Decrease the carrier frequency. 2) Make the wires between the inverter and motor shorter. 3) Use an earth leakage circuit breaker that has a longer sensitive current than one currently being used. 4) Use an earth leakage circuit breaker that features measures against harmonic component (Fuji SG and EG series).
An external thermal relay was activated.	1) Decrease the carrier frequency. 2) Increase the settling current of the thermal relay. 3) Use the electronic thermal motor overheat protection built in the inverter, instead of an external thermal relay.

Chapter 3 OPERATION USING THE KEYPAD

The FRENIC-Lift has no standard keypad. Using the optional multi-function keypad allows you to start and stop the motor, monitor running status, and switch to the menu mode. You may also set the function code data, monitor I/O signal states, maintenance information, and alarm information.

For details of the multi-function keypad, refer to the Multi-function Keypad "TP-G1-CLS" Instruction Manual (INR-S147-1092-E).

Chapter 4 RUNNING THE MOTOR

4.1 Running the Motor for a Test

4.1.1 Inspection and preparation prior to powering on

(1) Check if connection is correct.

Especially check if the power wires are connected to the inverter input terminals L1/R, L2/S and L3/T, and output terminals U, V and W respectively and that the grounding wires are connected to the ground electrodes correctly. Note that FRENIC-Lift series is designed for three phase input and driving three phase motors.

⚠WARNING

- Do not connect power supply wires to the inverter output terminals U, V, and W. Otherwise, the inverter may be broken if you turn the power ON.
- Be sure to connect the grounding wires of the inverter and the motor to the ground electrodes.
  Otherwise, electric shock may occur.

(2) Check for short circuits between terminals and exposed live parts and ground faults.

(3) Check for loose terminals, connectors and screws.

(4) Check if the motor is separated from mechanical equipment.

(5) Make sure that the switches are OFF so that the inverter does not start or operate erroneously at power-on.

(6) Check if safety measures are taken against runaway of the system, e.g., a defense to protect people from unexpectedly approaching your power system.

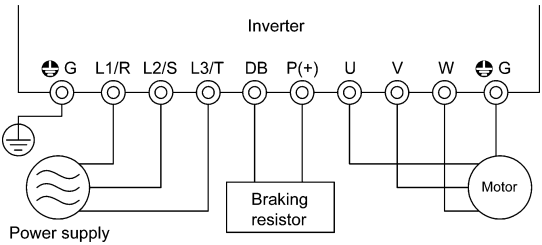

<for 3-phase power supply>

Figure 4.1 Connection of Main Circuit Terminals

(7) Make sure that the signal wires from the pulse encoder mounted on the motor or external equipment are connected to control signal input terminals (PA, PB, PO, CM and PZ if any) correctly.

(8) Make sure that the power source voltage (P0) to the pulse encoder satisfies the specifications.

4.1.2 Turning ON power and checking

⚠WARNING

- Be sure to install the covers for both the main circuit terminal block, control circuit terminal block and the front cover if any before turning the power ON.
  Do not remove any cover while powering on.
- Do not operate switches with wet hands.
  Otherwise electric shock could occur.

Turn the power ON and check the following points. The following assumes that no function code data is changed from the factory defaults.

(1) Check if a built-in cooling fan rotates.
(The cooling fan does not rotate if the control power only is supplied while the main power is shut down.)

4.1.3 Preparation before running the motor for a test--Setting function code data

Before starting running the motor, set function code data specified in Table 4.1 to the motor ratings and your system design values. For the motor, check the rated values printed on the nameplate of the motor. For your system design values, ask system designers about them.

To set up function code, you need to use the multi-function keypad (option) or to access their data via communications link. For details of the multi-function keypad and communications link, refer to the Multi-function Keypad Instruction Manual (INR-SI47-1092-E) and RS485 Communications FRENIC-Lift Reference Manual (INR-SI47-1068-E) respectively. For the factory defaults for the motor parameter, refer to the Chapter 5 " Appendix Factory Defaults ". If the parameter for your motor differs from the default, change it by using the function code.

Table 4.1 Settings of Function Code Data before Driving the Motor for a Test

Function code	Name	Function code data	Factory defaults
F04	Rated Speed	Motor ratings (printed on the nameplate of the motor)	1500 (r/min)
F05	Rated Voltage		380 (V)
P01	Motor (No. of poles)		4 (P)
P02	Motor (Rated Capacity)		Applicable motor rated capacity
P03	Motor (Rated current)		Rated current of applicable motor
P06	Motor (No-load current)		No load current of the standard motor
P07	Motor (%R1)		Primary resistance of the standard motor
P08	Motor (%X)		Leakage reactance of the standard motor
P12	Motor (Rated slip)		0.00 (Hz)*1 *1 The rated slip of the standard motor is applied.
L01	Pulse Encoder (Selection)	Depending on data sheet of the pulse encoder.	L01 = 0: 12/15 V complimentary, open collector output circuit. or 5 V line driver
L02	Pulse Encoder (Resolution)		1024 (p/r) (pulses/rev)
L04	Magnetic Pole Position Offset (Offset angle)		0.00 (deg)
F03	Maximum Speed	System design values * For a test-driving of the motor, increase values so that they are longer than your system design values. If the set time is short, the inverter may not start running the motor.	1800 (r/min)
F42	Control Mode		F42 = 0: Vector control with PG (induction motor)
C21	Speed Command Unit		C21 = 0: r/min (Speed data format)
L31	Elevator Parameter (Speed)		60.0 (m/min)

Note

- In any of the following cases, the factory defaults may not produce the best results for auto torque boost, torque calculation monitoring, or auto energy saving, since the standard settings of motor parameters for Fuji motors are not applicable. Tune the motor parameters according to the procedure set forth below.
  - The motor to be driven is not a Fuji product or is a non-standard product.
  - The cabling between the motor and the inverter is long.
  - A reactor is inserted between the motor and the inverter.
- To drive a synchronous motor, you need to tune the inverter for the offset angle of magnet pole before running the motor.
  To drive a synchronous motor, use the option card to be ordered separately.
- Please set the function codes in the following order.

ROM version	The setting order
0300, 0500	C21, P02, P01, F03, L31, and other function codes.
Not listed above	C21, P01, F03, L31, and other function codes.

Please refer to section 5.1 "Function Codes Requiring Modification".

■ Tuning procedure

What follows gives you a tuning procedure of the inverter for a motor using a multi-function keypad (option.)

1) Preparation

Referring to the rating plate on the motor, set the following function codes to their nominal ratings:

- F04: Rated Speed
- F05: Rated Voltage
- P02: Motor (rated capacity)
- P03: Motor (rated current)

2) Selection of Tuning Process

Data for P04	Motor parameters subject to tuning:	Action	Choose the process when:
1	Primary resistance %R1 (P07) Leakage reactance %X (P08)	Measure %R1 and %X while the motor is stopped.	Apply this step if parameters of the no load current and rated slip are known.
2	Primary resistance %R1 (P07) Leakage reactance %X (P08) No-load current (P06) Rated slip (P12)	Lay %R1, %X, no load current, rated slip off while stopping the motor.	Apply this step if parameters of the no load current and rated slip are unknown.

Upon completion of the tuning, the primary resistance %R1 will be automatically saved into P07, the leakage reactance %X into P08, the no-load current into P06, and .the rated slip into P12.

3) Preparation of Machine System

Perform appropriate preparations on the motor and its load, such as disengaging the coupling and deactivating the safety device.

4) Perform tuning

① Set function code P04 to "1" or "2" and press the FUNC DATA key.

② Tuning takes place while the motor is stopped.
(Time for the tuning: Around 15 seconds max. if P04 = 1, 25 seconds max. if P04 = 2)

③ "Command off" is displayed on the LCD screen of a multi-function keypad.

④ The Run command is turned OFF and the tuning completes, with the next function code P06 displayed on the multi-function keypad. (the Run command given through the keypad or the communications link is automatically turned OFF).

⚠WARNING

In the tuning process of the inverter, no motor torque control for braking of the machinery takes effect. Tune the inverter for the motor after disconnecting it from the machinery, or after setting mechanical brake of the machinery. Anyway, do it after suppressing any dangerous factors.

An accident or injuries could occur.

⚠CAUTION

Tuning of the motor parameter using the function code H04 is exclusively designed for induction motors. Do not apply this to any synchronous motors.

■ Errors during tuning

Improper tuning would negatively affect the operation performance and, in the worst case, could even cause hunting or deteriorate precision. Therefore, if the inverter finds any abnormality in the results of the tuning or any error in the process of the tuning, it will display *er7* and discard the tuning data.

Listed below are the abnormal or error conditions that can be recognized during tuning.

Abnormal/error condition	Description
Abnormal result of tuning	An inter-phase imbalance has been detected; Tuning has resulted in an abnormally high or low value of a parameter.
Abnormal output current	An abnormally high current has been caused during tuning.
Sequence error	This will occur during tuning if the run command/EN terminal input/forced-to-decelerate terminal command ***DRS*** turns off, or the coast-to-stop terminal command ***BX*** turns on, where status of ***DRS*** and ***BX*** is expressed in normal logic.
Limitation exceeded	During tuning, a certain limitation has been reached or exceeded; The maximum output frequency or the peak limiter for output frequency has been reached or exceeded.
Other alarm condition	An undervoltage or an alarm has been occurred.

If any of these conditions has occurred, either eliminate the abnormal or error factor(s) and perform tuning again, or contact your Fuji Electric representative.

■ Tuning offset angle of the magnet pole

Before to proceed to running a synchronous motor, be sure to tune offset angle of the magnet pole. For the tuning procedure, refer to the instruction manual of the option card.

To apply a synchronous motor, use the option card in a separate ordering. For details, refer to the instruction manual of the option card.

⚠CAUTION

Running a synchronous motor without tuning of the offset angle may result in an unexpected operation.
An accident or injuries could occur.

4.1.4 Test run

⚠WARNING

If the user set the function codes wrongly or without completely understanding this Instruction Manual and the FRENIC-Lift Reference Manual (INR-SI-47-1068-E), the motor may rotate with a torque or at a speed not permitted for the machine.

Accident or injury may result.

Follow the descriptions of the previous Section 4.1.1, "Inspection and preparation prior to powering on" to Section 4.1.3, "Preparation before running the motor for a test," and begin test-driving of the motor.

Note Turn on the terminal [EN] before running the motor.

If sink/source change switch (SW1) is a sink side, connect terminal [EN] and terminal [CM].

If sink/source change switch (SW1) is a source side, connect terminal [EN] and terminal [PLC].

If terminal [EN] and [CM] don't connect, the motor doesn't rotate.

⚠CAUTION

If any abnormality is found to the inverter or motor, immediately stop operation and determine the cause referring to Chapter 6, "TROUBLESHOOTING."

---------- **Test running using the multi-function keypad (option)**----------

(1) Turn the power ON and check that the LED monitor blinks while indicating the **00* reference speed (frequency).

(2) Enter the local mode by holding down the REM/LOC key for at least 1 second. Pressing this key toggles between Local and Remote.

(3) Select a low reference speed around at 150 r/min by using the ∧/∨ key. Be sure of that the reference speed blinks on the LED monitor.

(4) Press the FWD key to start running the motor in the forward direction. (Check that the reference speed is displayed on the LED monitor correctly.)

(5) To stop the motor, press the STOP key.

(6) Press the REV key to start running the motor in the reverse direction. (Check that the reference speed is displayed on the LED monitor correctly.)

(7) To stop the motor, press the STOP key.

<Check the following points>

Be sure of that:

- Pressing the FWD key runs the motor forward.
- Pressing the REV key runs the motor reverse.
- Check for smooth rotation without motor humming or excessive vibration.
- Check for smooth acceleration and deceleration.

When no abnormality is found, press the FWD or REV key again to start driving the motor and increase the motor speed using ∧ / ∨ keys. Check the above points again.

📖 For details of the multi-function keypad, refer to the Multi-function Keypad "TP-G1-CLS" Instruction Manual (INR-S147-1092-E.)

4.2 Operation

After confirming ordinary operation by performing a test run, make mechanical connections (connections of the machine system) and electrical connections (wiring and cabling), and set the necessary parameters properly before starting a production run.

Note Before to proceed running the inverter in operations check the related function code data again and reconfigure it if needed.

Chapter 5 FUNCTION CODES

5.1 Function Code Tables

Function codes enable the FRENIC-Lift inverters to be set up to match your system requirements.

Each function code consists of a 3-letter string. The first letter is an alphabet that identifies its group and the following two letters are numerals that identify each individual code in the group. The function codes are classified into seven groups: Fundamental Functions (F codes), Extension Terminal Functions (E codes), Control Functions (C codes), Motor Parameters (P codes), High Performance Functions (H codes), Link Function (y codes) and Lift Functions (L codes). For details of function codes, refer to the FRENIC-Lift Reference Manual (INR-S147-1068-E). To determine the property of each function code, set data to the function code. The following descriptions supplement those given in the function code tables

■ Changing, validating, and saving function code data when the motor is running

Function codes are indicated by the following based on whether they can be changed or not when the inverter is running:

Notation	Change when running	Validating and saving function code data
Y*	Possible	If the data of the codes marked with Y* is changed, the change will immediately take effect; however, the change is not saved into the inverter's memory. To save the change, press the FUNC/DATA key. If you press the PRG/RESET key without pressing the FUNC/DATA key to exit the current state, then the changed data will be discarded and the previous data will take effect for the inverter operation.
Y	Possible	The data of the codes marked with Y can be changed with ∧ / ∨ keys regardless of whether the motor is running or not. Pressing the FUNC/DATA key will make the change effective and save it into the inverter's memory.
N	Impossible	—

■ Copying data

Connecting the multi-function keypad (option) to an inverter via the RS485 Communications Card (option) allows copying the data stored in the inverter's memory into the keypad's memory (refer to Menu 7 "Data Copying" in Programming mode). With this feature, you can easily transfer the data saved in a source inverter to other destination inverters.

If the specifications of the source and destination inverters differ, some code data may not be copied to ensure safe operation of your power system. Therefore, you need to set up the uncopied code data individually as necessary. Whether data will be copied or not is detailed with the following symbols in the "Data copying" column of the function code tables given below.

Y Will be copied unconditionally.
Y1 Will not be copied if the rated capacity differs from the source inverter.
Y2 Will not be copied if the rated input voltage differs from the source inverter.
N Will not be copied. (The function code marked "N" is not subject to the Verify operation, either.)

Note For details of how to set up or edit function codes, refer to the Multi-function Keypad "TP-G1-CLS" Instruction Manual (INR-S147-1092-E.)

■ Description on the control mode of FRENIC-Lift

FRENIC-Lift runs in following 3 control modes

A: Vector control with PG (asynchronous motor)

B: Vector control with PG (synchronous motor)

C: Test mode without PG (asynchronous motor)

You can select the control mode between them combining data of function codes, F42 and H18, and the terminal command ***PG/Hz*** as listed below.

F42	H18	***PG/Hz*** *1	Selected control mode
0	0	ON	Vector control with PG (asynchronous motor)/speed control
0	0	OFF	V/f control (asynchronous motor)/speed control*3
0	1	ON	Vector control with PG (asynchronous motor)/torque control
0	1	OFF	Vector control with PG (asynchronous motor)/torque control
1	0	ON	Vector control with PG (synchronous motor)*2/speed control
1	0	OFF	V/f control (asynchronous motor)/speed control*3
1	1	ON	Vector control with PG (synchronous motor) *2/speed control
1	1	OFF	Vector control with PG (synchronous motor) *2/speed control

*1 ON/OFF state is expressed in the normal logic. If no terminal command is assigned to any terminals, then the default value is ON.

*2 An optional card is needed in a separate ordering. For details of operation, refer to the instruction manual of the optional card.

*3 Apply this only for a test run. Do not apply this for the inverter in operations. Note that in this mode the inverter may not run in normal performance depending on a running condition.

In the torque control, data of some function codes related to the control may be enabled or disabled. Marks to classify these situations in the torque control column of the function code table on following pages as shown below.

Y1: Code data is enabled and affects the inverter operations.

Y2: Code data is partially enabled and affects the inverter operations.

N: Code data is disabled and does not affect the inverter operations.

■ Function Codes Requiring Modification

⚠CAUTION

Specifying Order of Function Codes

Function codes C21 (Speed Command Unit) and P01 (Motor, No. of poles) should be specified preceding other function codes. This is because depending upon those code data, the setting ranges and units of some function codes differ as listed below.

Next, F03 (Maximum Speed) and L31 (Elevator Parameter, Speed) should be specified.

Changing any data of C21, P01, F03 and L31 requires modifying the data of the function codes listed below again.

	Function Codes Requiring Modification
C21 Depending upon the data of C21 (Speed Command Unit), the setting ranges and units of the function codes listed at the right differ. F03 or L31 (when C21 = 1) Depending upon the data of F03 (Maximum Speed) or L31 (Elevator Parameter, Speed) when C21 = 1, the setting ranges of the function codes listed at the right differ.	F04 (Rated Speed) F23 (Starting Speed) F25 (Stop Speed) E30 (Speed Arrival, Hysteresis) E31 (Speed Detection, Detection level) E32 (Speed Detection, Hysteresis) C03 (Battery Operation Speed) C04 (Zero Speed) to C11 (High Speed) C20 (Jogging speed) H74 (Speed Agreement, Hysteresis) L30 (Short Floor Operation, Allowable speed) L40 (ASR, Switching speed 1) L41 (ASR, Switching speed 2) L87 (Door Control, Door open starting speed)
P01 Depending upon the data of P01 (Motor, No. of poles), the setting ranges of the function codes listed at the right differ	Function codes listed above plus F03 (Maximum Speed)

Note: The setting ranges and units of the function codes in this manual are mentioned, based on the factory defaults of C21 and P01, that is, C21 = 0 (r/min) and P01 = 4 (4 poles).

Note: When you set the function code, please set the function codes in the following order.

ROM version	The setting order
0300, 0500	C21, P02, P01, F03, L31, and other function codes.
Not listed above	C21, P01, F03, L31, and other function codes.

F codes: Fundamental Functions

Code	Name	Data setting range	Increment	Unit	Change when running	Data copying	Default setting	Torque Control
F00	Data Protection	0000_H: Disable data protection (Function code data can be edited) 0001_H: Enable data protection Note: This setting is effective if H99 = 0000_H.	-	-	Y	N	0000_H	Y
	(Password entry)	0001_H to $FFFF_H$ Note: This setting is effective if H99 = other Data of H99 is your password						
F01	Speed Command	0: Multistep speed command 1: Analog speed command (Not reversible) 2: Analog speed command (Reversible)	-	-	N	Y	0	N
F03	Maximum Speed	300.0 to 3600 *1	Variable	r/min	N	Y	1800 *2	Y
F04	Rated Speed	300.0 to 3600 *1	Variable	*3	N	Y	1500	Y
F05	Rated Voltage	160 to 500 V: Output a voltage AVR-controlled	1	V	N	Y2	380	Y
F07	Acceleration/Deceleration Time 1	0.00 to 99.9 Note: Acceleration/Deceleration time is ignored at 0.00	Variable	s	Y	Y	6.00	N
F08	Acceleration/Deceleration Time 2		Variable	s	Y	Y	6.00	N
F10	Electronic Thermal Overload Protection for Motor (motor characteristics)	1: For general-purpose motors with built-in 2: For inverter-driven motors or high-speed motors with forced-ventilation fan	-	-	Y	Y	2	Y
F11	(Overload detection level)	0.00 (Disable) 1 to 200% of the rated current (allowable continuous drive current) of the inverter	Variable	A	Y	Y1 Y2	Refer to p. 5-13	Y
F12	(Thermal time constant)	0.5 to 75.0	0.1	min	Y	Y	5.0	Y
F23	Starting Speed	0.00 to 150.0 *1	Variable	*3	N	Y	6.00	N
F24	(Holding time)	0.00 to 10.00	0.01	s	N	Y	0.00	N
F25	Stop Speed	0.00 to 150.0 *1	Variable	*3	N	Y	3.00	N
F26	Motor Sound (Carrier frequency)	5 to 15	1	kHz	N	Y	15	Y
F30	Reserved *4	-	-	-	Y	Y	0	-
F42	Control Mode	0: Vector control with PG for asynchronous motor 1: Vector control with PG for synchronous motor	-	-	N	Y	0	Y
F44	Current Limiter (Level)	100 to 200 (Percentage to the rated current of 999 The maximum current of each inverter	1	%	Y	Y	999	N

*1 Data setting range is variable. Refer to p. 5-3.
*2 Factory default setting varies depending on the shipping destination.
*3 The unit changes by setting C21.
*4 It is reserved for particular manufacturers. Do not access this funciton code.

E codes: Extension Terminal Functions

Code	Name	Data setting range	Increment	Unit	Change when running	Data copying	Default setting	Torque Control
E01	Command Assignment to: [X1]	Selecting function code data assigns the corresponding function to terminals [X1] to [X8] as listed below. Setting the value of 1000s in parentheses( ) shown below assigns a negative logic input to a terminal.	-	-	N	Y	0	-
E02	[X2]		-	-	N	Y	1	-
E03	[X3]		-	-	N	Y	2	-
E04	[X4]		-	-	N	Y	8	-
E05	[X5]		-	-	N	Y	60	-
E06	[X6]		-	-	N	Y	61	-
E07	[X7]		-	-	N	Y	62	-
E08	[X8]		-	-	N	Y	63	-
		0 (1000) Select multistep speed 1 ***SS1***						N
		1 (1001) Select multistep speed 2 ***SS2***						N
		2 (1002) Select multistep speed 4 ***SS4***						N
		7 (1007) Enable coast-to-stop ***BX***						Y
		8 (1008) Reset alarm ***RST***						Y
		9 (1009) Enable external alarm trip ***THR***						Y
		10 (1010) Enable jogging operation ***JOG***						N
		24 (1024) Enable communications link via RS485 or CAN ***LE***						Y
		25 (1025) Universal DI ***U-DI***						Y
		27 (1027) Enable PG vector control ***PG/Hz***						N
		60 (1060) Select torque bias 1 ***TB1***						Y
		61 (1061) Select torque bias 2 ***TB2***						Y
		62 (1062) Hold torque bias ***H-TB***						Y
		63 (1063) Enable battery operation ***BATRY***						Y
		64 (1064) Start creepless operation ***CRPLS***						N
		65 (1065) Check brake control ***BRKE***						N
		66 (1066) Force to decelerate ***DRS***						Y
		67 (1067) Start unbalance load ***UNBL***						Y
		Default for ***THR***: 1009 for Active on, 9 for Active off						
E10	Acceleration/Deceleration Time 3	0.00 to 99.9 Acceleration/Deceleration time is ignored at 0.00	Variable	s	Y	Y	6.00	N
E11	Acceleration/Deceleration Time 4		Variable	s	Y	Y	6.00	N
E12	Acceleration/Deceleration Time 5		Variable	s	Y	Y	6.00	N
E13	Acceleration/Deceleration Time 6		Variable	s	Y	Y	6.00	N
E14	Acceleration/Deceleration Time 7		Variable	s	Y	Y	6.00	N
E15	Acceleration/Deceleration Time 8		Variable	s	Y	Y	6.00	N
E16	Acceleration/Deceleration Time 9		Variable	s	Y	Y	6.00	N
E17	Acceleration/Deceleration Time 10		Variable	s	Y	Y	6.00	N
E18	Run Command/ Multistep Speed Command Agreement (Mode)		-	-	N	Y	2	-
		0: None						Y
		1: ***FWD***, ***REV***						Y
		2: ***SS1***, ***SS2***, ***SS4***						N
		3: ***FWD***, ***REV*** / ***SS1***, ***SS2***, ***SS4***						Y
E19	Timer (Time)	0.000 to 0.100	0.001	s	N	Y	0.005	Y

(E code continued)

Code	Name	Data setting range	Increment	Unit	Change when running	Data copying	Default setting	Torque Control
E20	Signal Assignment to: (Transistor signal) [Y1]	Selecting function code data assigns the corresponding function to terminals [Y1] to [Y4], [Y5A/C], and [30A/B/C] as listed below. Setting the value of 1000s in parentheses ( ) shown below assigns a negative logic input to a terminal.	-	-	N	Y	0	-
E21	[Y2]		-	-	N	Y	71	-
E22	[Y3]		-	-	N	Y	57	-
E23	[Y4]		-	-	N	Y	73	-
E24	(Relay contact signal) [Y5A/C]		-	-	N	Y	74	-
E27	[30A/B/C]		-	-	N	Y	99	-
		0 (1000) Inverter running ***RUN***						Y
		1 (1001) Speed arrival ***FAR***						N
		2 (1002) Speed detected ***FDT***						Y
		3 (1003) Undervoltage detected (Inverter stopped) ***LU***						Y
		10 (1010) Inverter ready to run ***RDY***						Y
		12 (1012) MC control ***SW52-2***						Y
		25 (1025) Cooling fan in operation ***FAN***						Y
		26 (1026) Auto-resetting ***TRY***						Y
		27 (1027) Universal DO ***U-DO***						Y
		28 (1028) Overheat early warning ***OH***						Y
		30 (1030) Service life alarm ***LIFE***						Y
		35 (1035) Inverter output on ***RUN2***						Y
		37 (1037) Current detected ***ID***						Y
		38 (1038) Current detected 2 ***ID2***						Y
		55 (1055) Run command activated ***AX2***						Y
		56 (1056) Motor overheat detected ***THM***						Y
		57 (1057) Brake control ***BRKS***						N
		70 (1070) Speed existence ***DNZS***						Y
		71 (1071) Speed agreement ***DSAG***						N
		72 (1072) Speed arrival 3 ***FAR3***						N
		73 (1073) During acceleration ***DACC***						N
		74 (1074) During deceleration ***DDEC***						N
		75 (1075) During zero speed ***DZR***						N
		76 (1076) PG abnormal ***PG-ABN***						N
		78 (1078) Door control ***DOPEN***						N
		99 (1099) Alarm output (for any alarm) ***ALM***						Y
		101 (1101) EN detection circuit fault ***DECF***						Y
		102 (1102) EN terminal off ***ENOFF***						Y
		104 (1104) Low voltage detected ***LVD***						Y
		105 (1105) Electrical angle cycle ***EAC***						Y
		106 (1106) Reserved for particular ***DTBW***						Y
E30	Speed Arrival (Hysteresis)	0.00 to 3600 *1	Variable	*3	Y	Y	10	N
E31	Speed Detection (FDT) (Detection level)	0.00 to 3600 *1	Variable	*3	Y	Y	1800 *2	Y
E32	(Hysteresis)	0.00 to 900.0 *1	Variable	*3	Y	Y	20	Y
E34	Current Detection 1 (Level 1)	0.00: (Disable) Current value of 1 to 200% of the inverter rated current	Variable	A	Y	Y1 Y2	Refer to p. 5-10	Y
E35	(Time)	0.01 to 600.00	0.01	s	Y	Y	10.00	Y
E37	Current Detection 2 (Level 2)	0.00: (Disable) Current value of 1 to 200% of the inverter rated current	Variable	A	Y	Y1 Y2	Refer to p. 5-10	Y

*1 Data setting range is variable. Refer to p. 5-3.
*2 Factory default setting varies depending on the shipping destination.
*3 The unit changes by setting C21.

(E code continued)

Code	Name	Data setting range	Increment	Unit	Change when running	Data copying	Default setting	Torque Control
E43	LED Monitor		-	-	Y	Y	0	-
	(Item selection)	0: Speed monitor (Select by E48)						Y
		3: Output current						Y
		4: Output voltage						Y
		8: Calculated torque						Y
		9: Input power						Y
		18: Reference torque						Y
		19: Torque bias balance adjustment (Offset)						Y
		20: Torque bias gain adjustment (BTBG)						Y
E45	LCD Monitor (Item selection)	0: Running status, rotational direction and 1: Bar charts for reference speed(Final), output current and reference torque	-	-	Y	Y	0	Y
E46	(Language selection)	0: Chinese 1: English 2: Japanese	-	-	Y	Y	2 *2	Y
E47	(Contrast control)	0 (Low) to 10 (High)	1	-	Y*	Y	5	Y
E48	LED Monitor		-	-	Y	Y	0	-
	(Speed monitor item)	0: Reference speed (Final)						N
		2: Reference speed (Pre-ramp)						Y
		3: Motor speed						Y
		5: Elevator speed						Y
E61	Analog Input for: (Extension function [12]	Selecting function code data assigns the corresponding function to terminals [12], [C1] and [V2] as listed below.	-	-	N	Y	0	-
E62	[C1]		-	-	N	Y	0	-
E63	[V2]		-	-	N	Y	0	-
		0: None						Y
		1: Speed command (Not reversible operation with polarity)						N
		2: Speed command (Reversible operation with polarity) (Nothing for [C1])						N
		3: Torque current command						Y
		4: Torque bias command						Y
E98	Command Assignment to: [FWD]	Selecting function code data assigns the corresponding function to terminals [FWD] and [REV] as listed below. Setting the value of 1000s in parentheses ( ) shown below assigns a negative logic input to a terminal.	-	-	N	Y	98	-
E99	[REV]		-	-	N	Y	99	-
		0 (1000) Select multistep speed 1 ***SS1***						N
		1 (1001) Select multistep speed 2 ***SS2***						N
		2 (1002) Select multistep speed 4 ***SS4***						N
		7 (1007) Enable coast-to-stop ***BX***						Y
		8 (1008) Reset alarm ***RST***						Y
		9 (1009) Enable external alarm trip ***THR***						Y
		10 (1010) Enable jogging operation ***JOG***						N
		24 (1024) Enable communications link via RS485 or CAN ***LE***						Y
		25 (1025) Universal DI ***U-DI***						Y
		27 (1027) Enable PG vector control ***PG/Hz***						N
		60 (1060) Select torque bias 1 ***TB1***						Y
		61 (1061) Select torque bias 2 ***TB2***						Y
		62 (1062) Hold torque bias ***H-TB***						Y
		63 (1063) Enable battery operation ***BATRY***						Y
		64 (1064) Start creepless operation ***CRPLS***						N
		65 (1065) Check brake control ***BRKE***						N
		66 (1066) Force to decelerate ***DRS***						Y
		67 (1067) Start unbalance load ***UNBL***						Y
		98 Run forward ***FWD***						Y
		99 Run reverse ***REV***						Y
		Default for ***THR***: 1009 for Active on, 9 for Active off Default for ***DRS***: 1066 for Active on, 66 for Active off						

*2 Factory default setting varies depending on the shipping destination.

C codes: Control Functions

Code	Name	Data setting range	Increment	Unit	Change when running	Data copying	Default setting	Torque Control
C03	Battery Operation Speed	0.00 to 3600 *1	Variable	*3	Y	Y	0.00	N
C04	Multistep Speed Zero Speed	0.00 to 3600 *1	Variable	*3	Y	Y	0.00	N
C05	Manual Speed (Middle				Y	Y	0.00	N
C06	Maintenance Speed				Y	Y	0.00	N
C07	Creep Speed				Y	Y	0.00	N
C08	Manual Speed (Low)				Y	Y	0.00	N
C09	Low Speed				Y	Y	0.00	N
C10	Middle Speed				Y	Y	0.00	N
C11	High Speed				Y	Y	0.00	N
C20	Jogging Operation Speed	0.00 to 3600 *1	Variable	*3	Y	Y	150.0	N
C21	Speed Command Unit	0: r/min 1: m/min 2: Hz	-	-	Y	Y	0	Y
C31	Analog Input Adjustment for [12] (Offset)	-100.0 to +100.0	0.1	%	Y*	Y	0.0	Y
C32	(Gain)	0.00 to 200.00	0.01	%	Y*	Y	100.00	Y
C33	(Filter time constant)	0.000 to 5.000	0.001	s	Y	Y	0.050	Y
C36	Analog Input Adjustment for [C1] (Offset)	-100.0 to +100.0	0.1	%	Y*	Y	0.0	Y
C37	(Gain)	0.00 to 200.00	0.01	%	Y*	Y	100.00	Y
C38	(Filter time constant)	0.000 to 5.000	0.001	s	Y	Y	0.050	Y
C41	Analog Input Adjustment for [V2] (Offset)	-100.0 to +100.0	0.1	%	Y*	Y	0.0	Y
C42	(Gain)	0.00 to 200.00	0.01	%	Y*	Y	100.00	Y
C43	(Filter time constant)	0.000 to 5.000	0.001	s	Y	Y	0.050	Y

*1 Data setting range is variable. Refer to p. 5-3.
*3 The unit changes by setting C21.

P codes: Motor Parameters

Code	Name	Data setting range	Increment	Unit	Change when running	Data copying	Default setting	Torque Control
P01	Motor (No. of poles)	2 to 100	2	Poles	N	Y1 Y2	4	Y
P02	(Rated capacity)	0.01 to 55.00	0.01	kW	N	Y1 Y2	Refer to p. 5-10	Y
P03	(Rated current)	0.00 to 500.0	Variable	A	N	Y1 Y2	Refer to p. 5-10	Y
P04	(Auto-tuning)	0: Disable 1: Enable (Tune %R1 and %X while the motor is stopped.) 2: Enable (Tune %R1, %X, no-load current, and rated slip while the motor is stopped.)	-	-	N	N	0	Y
P06	(No-load current)	0.00 to 500.0	Variable	A	N	Y1 Y2	Refer to p. 5-10	Y
P07	(%R1)	0.00 to 50.00	0.01	%	Y	Y1 Y2	Refer to p. 5-10	Y
P08	(%X)	0.00 to 50.00	0.01	%	Y	Y1 Y2	Refer to p. 5-10	Y
P09	(Slip comp. driving)	0.0 to 200.0	0.1	%	Y	Y	100.0	Y
P10	(Slip comp. braking)	0.0 to 200.0	0.1	%	Y	Y	100.0	Y
P12	(Rated slip)	0.00: Rated slip of Fuji standard motor 0.01 to 15.00	0.01	Hz	Y	Y1 Y2	0.00	Y

H codes: High Performance Functions

Code	Name	Data setting range	Increment	Unit	Change when running	Data copying	Default setting	Torque Control
H03	Data Initialization	0: Disable initialization 1: Initialize all function code data to the	-	-	N	N	0	Y
H04	Auto-resetting (Times)	0: Disable 1 to 10	1	Times	Y	Y	0	Y
H05	(Reset interval)	0.5 to 20.0	0.1	s	Y	Y	2.0	Y
H06	Cooling Fan Control	.0: Auto ON/OFF depending upon temperature 0.5 to 10.0 min: OFF by timer 999: Disable (Always	0.1	min	Y	Y	999	Y
H18	Torque Control	0: Disable (Speed control) 1: Enable (Torque control)	-	-	N	Y	0	Y
H26	PTC Thermistor (Mode)	0: Disable 1: Enable (Upon detection of (PTC), the inverter immediately trips and stops with o64 signal TWW) 2: Enable (Upon detection of (PTC), the inveter continues running while outputting alarm signal TWW)	-	-	Y	Y	0	Y
H27	(Level)	0.00 to 5.00	0.01	V	Y	Y	1.60	Y
H30	Communications Link Operation	Speed command / Run command / Torque bias command 0: F01 / Terminal / L54 1: RS485 / Terminal / L54 2: F01 / RS485 / L54 3: RS485 / RS485 / L54 4: CAN / Terminal / L54 5: F01 / CAN / L54 6: CAN / CAN / L54 7: F01 / Terminal / RS485 8: RS485 / Terminal / RS485 9: F01 / RS485 / RS485 10: RS485 / RS485 / RS485 11: F01 / Terminal / CAN 12: CAN / Terminal / CAN 13: F01 / CAN / CAN 14: CAN / CAN / CAN	-	-	Y	Y	0	Y
H42	Capacitance of DC Link Bus Capacitor	0 to 65535: Indication for replacing DC link bus capacitor	-	-	N	N	-	Y
H43	Cumulative Run Time of Cooling Fan	0 to 65535: Indication of cumulative run time of cooling fan for replacement	-	-	N	N	-	Y
H47	Initial Capacitance of DC Link Bus Capacitor	0 to 65535: Indication for replacing DC link bus capacitor	-	-	N	N	Set at factory shipping	Y
H48	Cumulative Run Time of Capacitors on Printed Circuit Board	0 to 65535: Indication for replacing capacitors on printed circuit boards	-	-	N	N	-	Y
H54	Acceleration Time (Jogging)	0.00 to 99.9	Variable	s	Y	Y	6.00	N
H55	Deceleration Time (Jogging)	0.00 to 99.9	Variable	s	Y	Y	6.00	N
H56	Deceleration Time for Forced to Decelerate	0.00 to 99.9	Variable	s	Y	Y	6.00	N
H65	Starting Speed (Soft start time)	0.0 to 60.0	0.1	s	N	Y	0.0	N
H66	Stop Speed (Detection method)	0: Use detected speed 1: Use reference speed (Final)	-	-	N	Y	0	N
H67	(Holding time)	0.00 to 10.00	0.01	s	N	Y	0.00	N
H74	Speed Agreement (Hysteresis)	0.00 to 3600 *1	Variable	*3	Y	Y	10.00	N
H75	(OFF delay time)	0.00 to 1.00	0.01	s	Y	Y	0.20	N
H94	Cumulative Run Time of Motor	0 to 65535: Change or reset the cumulative data	-	-	N	N	0	Y
H97	Clear Alarm Data	If H97= 1, its data returns to zero after clearin	-	-	Y	N	0	Y
H98	Protection/Maintenance Function	00000000_b to 01111111_b (Displayed on the keypad's LCD in decimal format. In each bit, "0" for disablin, "1" for enabl d.) Bit 0: Lower the carrier frequency automatically Bit 1: Detect input phase loss Bit 3: Select life judgment criteria of DC link Bit 4: Judge the life of DC link bus capacitor Bit 6: Detect a short-circuit at startup	-	-	Y	Y	81	Y
H99	Password Protection	0000_H to $FFFF_H$ 0000_H: Disable password protection 0001_H to $FFFF_H$: Enable password protection	-	-	Y	N	0000_H	Y

*1 Data setting range is variable. Refer to p. 5-3.
*3 The unit changes by setting C21.

y codes: Link Functions

Code	Name	Data setting range	Increment	Unit	Change when running	Data copying	Default setting	Torque Control
y01	RS485 Communication (Station address)	1 to 255	1	-	N	Y	1	Y
y02	(Communications error processing)	0: Immediately trip with alarm *err8* 1: Trip with alarm *err8* after running for the period specified by timer y03 2: Retry during the period specified by timer y03. If retry fails, trip with alarm *err8*. If 3: Continue to run	-	-	Y	Y	0	Y
y03	Error processing time)	0.0 to 60.0	0.1	s	Y	Y	2.0	Y
y04	(Baud rate)	0: 2400 bps 1: 4800 bps 2: 9600 bps 3: 19200 bps 4: 38400 bps	-	-	Y	Y	3	Y
y05	(Data length)	0: 8 bits 1: 7 bits	-	-	Y	Y	0	Y
y06	(Parity check)	0: None (Stop bit 2) 1: Even parity 2: Odd parity 3: None (Stop bit 1)	-	-	Y	Y	0	Y
y07	(Stop bits)	0: 2 bits 1: 1 bit	-	-	Y	Y	0	Y
y08	(No-response error detection time)	0: (No detection) 1 to 60	1	s	Y	Y	0	Y
y09	Response latency time)	0.00 to 1.00	0.01	s	Y	Y	0.01	Y
y10	(Protocol selection)	0: Modbus RTU protocol 1: SX protocol (FRENIC Loader protocol) 2: Reserved for particular manufacturers	-	-	Y	Y	1	Y
y21	CAN Communication (Station address)	1 to 127	1	-	N	Y	1	Y
y24	(Baud rate)	0: 10 kbps 1: 20 kbps 2: 50 kbps 3: 125 kbps 4: 250 kbps	-	-	N	Y	3	Y
y25	(User-defined I/O parameter 1)	0000_H to $FFFF_H$	-	-	N	Y	0000_H	Y
y26	(User-defined I/O parameter 2)		-	-	N	Y	0000_H	Y
y27	(User-defined I/O parameter 3)		-	-	N	Y	0000_H	Y
y28	(User-defined I/O parameter 4)		-	-	N	Y	0000_H	Y
y29	(User-defined I/O parameter 5)		-	-	N	Y	0000_H	Y
y30	(User-defined I/O parameter 6)		-	-	N	Y	0000_H	Y
y31	(User-defined I/O parameter 7)		-	-	N	Y	0000_H	Y
y32	(User-defined I/O parameter 8)		-	-	N	Y	0000_H	Y
y33	(Operation	0: Disable 1: Enable	-	-	N	Y	0	Y
y41	Reserved *4	-	-	-	N	Y	0	N
y99	Loader Link Function (Mode)	Control command / Run command 0: Follow H30 / Follow H30 1: Via Loader / Follow H30 2: Follow H30 / Via Loader 3: Via Loader / Via Loader Note: Control commands include Speed command, Torque current command, and Torque bias command.	-	-	Y	N	0	Y

*4 It is reserved for particular manufacturers. Do not access this funciton code.

L codes: Lift Functions

Code	Name	Data setting range	Increment	Unit	Change when running	Data copying	Default setting	Torque Control
L01	Pulse Encoder (Selection)	A/B phase / ABS signal 0: 12/15 V - Complementary - Open collector / None 5 V Line driver 2: 5 V Line driver / 3-bit code 3: 5 V Line driver / 4-bit gray code 4: Sinusoidal differential voltage (1 Vp-p) / EnDat 2.1 (ECN1313 compatible)	-	-	N	Y	0	Y
L02	(Resolution)	360 to 60000	1	P/R	N	Y	1024	Y
L03	Magnetic Pole Position (Tuning)	0: Disable 1: Tuning operation. 2: Tuning operation with miss wiring detection. 3: Tuning operation with checking accuracy. 4: Reserved for particular manufacturers. 5: Reserved for particular manufacturers. Note: This setting is effective if F42 = 1.	-	-	N	N	0	Y
L04	(Offset angle)	0.00 to 360.00 (Return value of L03) Note: This setting is effective if F42 = 1.	0.01	deg	N	Y	0.00	Y
L05	Reserved *4	-	-	-	Y	Y	1.5	Y
L06	Reserved *4	-	-	-	Y	Y	0.80	Y
L08	Divide frequency ratio	0: 1/1 1: 1/2 2: 1/4 3: 1/8 4: 1/16 5: 1/32 6: 1/64	-	-	N	Y	0	Y
L09	Filter Time Constant for Reference Speed (Final)	0.000 to 0.100	0.001	s	Y	Y	0.000	N
L10	Filter Time Constant for Detected Speed	0.000 to 0.100	0.001	s	Y	Y	0.005	Y
L11	Multistep Speed Command Combination Zero Speed	00000000b to 00000111b (0 to 7) Note: If a binary value within the range from 00000000_b to 00000111_b is double-assigned, the inverter trips with alarm *er6*.	1	-	N	Y	0	N
L12	Manual Speed (Middle)				N	Y	1	N
L13	Maintenance Speed				N	Y	2	N
L14	Creep Speed				N	Y	3	N
L15	Manual Speed (Low)				N	Y	4	N
L16	Low Speed				N	Y	5	N
L17	Middle Speed				N	Y	6	N
L18	High Speed				N	Y	7	N
L19	S-curve Setting 1	0 to 50% of max. speed	1	%	Y	Y	0	N
L20	S-curve Setting 2				Y	Y	0	N
L21	S-curve Setting 3				Y	Y	0	N
L22	S-curve Setting 4				Y	Y	0	N
L23	S-curve Setting 5				Y	Y	0	N
L24	S-curve Setting 6				Y	Y	0	N
L25	S-curve Setting 7				Y	Y	0	N
L26	S-curve Setting 8				Y	Y	0	N
L27	S-curve Setting 9				Y	Y	0	N
L28	S-curve Setting 10				Y	Y	0	N
L29	Short Floor Operation (Holding time)	0.00 to 10.00	0.01	s	N	Y	0.00	N
L30	(Allowable speed)	0.00 to 3600 *1	Variable	*3	N	Y	0.00	N
L31	Elevator Parameter (Speed)	0.01 to 240.00 (Max. speed of the elevator)	0.01	m/min	N	Y	60.00	Y
L34	(Moving distance of creepless operation)	0.0 to 6553.5	0.1	mm	N	Y	0.0	N

*1 Data setting range is variable. Refer to p. 5-3.
*3 The unit changes by setting C21.
*4 It is reserved for particular manufacturers. Do not access this funciton code.

(L code continued)

Code	Name	Data setting range	Increment	Unit	Change when running	Data copying	Default setting	Torque Control
L36	ASR (P constant at high speed)	0.01 to 200.00	0.01	-	Y	Y	40.00	N
L37	constant at high speed)	0.001 to 1.000	0.001	s	Y	Y	0.100	N
L38	(P constant at low speed)	0.01 to 200.00	0.01	-	Y	Y	40.00	N
L39	constant at low speed)	0.001 to 1.000	0.001	s	Y	Y	0.100	N
L40	(Switching speed 1)	0.00 to 3600 *1	Variable	*3	Y	Y	150.0	N
L41	(Switching speed 2)	0.00 to 3600 *1	Variable	*3	Y	Y	300.0	N
L42	(Feed forward gain)	0.000 to 10.000	0.001	s	Y	Y	0.000	N
L43	Reserved *4	-	-	-	Y	Y	10	Y
L44	Reserved *4	-	-	-	Y	Y	0	Y
L45	Reserved *4	-	-	-	Y	Y	10	Y
L46	Reserved *4	-	-	-	Y	Y	0	Y
L47	Reserved *4	-	-	-	Y	Y	10	Y
L48	Reserved *4	-	-	-	Y	Y	0	Y
L49	Vibration Suppression Observer (Gain)	0.00: Disabled 0.01 to 1.00	0.01	-	Y	Y	0.00	Y
L50	(Integral time)	0.005 to 1.000	0.001	s	Y	Y	0.100	Y
L51	(Load inertia)	0.01 to 655.35	0.01	kgm^2	Y	Y	0.01	Y
L52	Start Control Mode	0: Enable speed start mode 1: Enable torque start mode Note: This setting is effective if H18 = 0.	1	-	Y	Y	0	N
L54	Torque Bias (Mode)	0: Analog 1: Digital 2: PI control	-	-	N	Y	0	Y
L55	(Startup time)	0.00 to 1.00	0.01	s	Y	Y	0.20	Y
L56	(Reference torque end time)	0.00: Disable 0.01 to 20.00	0.01	s	Y	Y	0.00	Y
L57	(Limiter)	0 to 200	1	%	Y	Y	100	Y
L58	(P constant)	0.01 to 10.00	0.01	-	Y	Y	1.00	Y
L59	(Integral time)	0.00 to 1.00	0.01	s	Y	Y	1.00	Y
L60	(Driving gain)	-1000.0 to 1000.0	0.1	%	Y*	Y	100.0	Y
L61	(Braking gain)	-1000.0 to 1000.0	0.1	%	Y*	Y	100.0	Y
L62	(Digital 1)	-200 to 200	1	%	Y	Y	0	Y
L63	(Digital 2)	-200 to 200	1	%	Y	Y	0	Y
L64	(Digital 3)	-200 to 200	1	%	Y	Y	0	Y
L65	Unbalanced Load Compensation (Operation)	0: Disable 1: Enable	-	-	N	Y	0	Y
L66	(Activation time)	0.01 to 2.00	0.01	s	N	Y	0.50	Y
L67	(Holding time)	0.01 to 20.00	0.01	s	N	Y	0.50	Y
L68	(ASR P constant)	0.00 to 200.00	0.01	-	Y	Y	40.00	Y
L69	(ASR I constant)	0.001 to 1.000	0.001	s	Y	Y	0.100	Y

*1 Data setting range is variable. Refer to p. 5-3.

*3 The unit changes by setting C21.

*4 It is reserved for particular manufacturers. Do not access this funciton code.

(L code continued)

Code	Name	Data setting range	Increment	Unit	Change when running	Data copying	Default setting	Torque Control
L80	Brake Control (Mode)	1: Brake control by 2: Brake control by output current	-	-	N	Y	1	N
L81	(Operation level)	0 to 200	1	%	N	Y	100	N
L82	(ON delay time)	0.00 to 10.00	0.01	s	N	Y	0.00	N
L83	(OFF delay time)	0.00 to 100.00	0.01	s	N	Y	0.00	N
L84	(Brake check time)	0.00 to 10.00	0.01	s	N	Y	0.00	N
L85	MC Control (Startup delay time)	0.00 to 10.00	0.01	s	N	Y	0.00	Y
L86	(MC OFF delay time)	0.00 to 10.00	0.01	s	N	Y	0.00	Y
L87	Door Control (Door open starting	0.00 to 3600 *1	Variable	*3	N	Y	100.0	N
L88	(Door open delay time)	0.0 to 10.0	0.1	s	N	Y	1.0	N
L89	(Door open period)	0.1 to 30.0	0.1	s	N	Y	5.0	N
L90	PG Error Detection (Mode)	0: Continue to run 1: Trip at alarm mode 1 with alarm *erE* 2: Trip at alarm mode 2 with alarm *erE*	-	-	N	Y	1	N
L91	(Detection level)	0 to 50	1	%	Y	Y	10	N
L92	(Detection time)	0.0 to 10.0	0.1	s	Y	Y	0.5	N
L93	Overheat Early Warning	1 to 20	1	deg	Y	Y	5	Y
L95	Reserved *4	-	-	-	N	Y	999	Y
L96	Reserved *4	-	-	-	N	Y	30	Y
L99	Control	00000000b to 00000001b (In each bit, "0" for disabled, "1" for enabled.) Bit0: Current confirmation when starting (for synchronous motor)	-	-	N	Y	0	Y

*1 Data setting range is variable. Refer to p. 5-3.
*3 The unit changes by setting C21.
*4 It is reserved for particular manufacturers. Do not access this funciton code.

Appendix: Factory Defaults

Type	P02	F11,E34,E37,P03	P06	P07	P08
FRN5.5LM1S-4__	5.50[kW]	13.50[A]	8.40[A]	4.05[%]	11.72[%]
FRN7.5LM1S-4__	7.50[kW]	18.50[A]	9.80[A]	4.23[%]	13.01[%]
FRN11LM1S-4__	11.00[kW]	24.50[A]	13.90[A]	3.22[%]	12.27[%]
FRN15LM1S-4__	15.00[kW]	32.00[A]	17.90[A]	2.55[%]	11.47[%]
FRN18.5LM1S-4__	18.50[kW]	37.00[A]	16.20[A]	1.98[%]	11.97[%]
FRN22LM1S-4__	22.00[kW]	45.00[A]	19.00[A]	2.11[%]	12.35[%]

Chapter 6 TROUBLESHOOTING

6.1 Before Proceeding with Troubleshooting

⚠WARNING

If any of the protective functions have been activated, first remove the cause. Then, after checking that the all run commands are set to off, reset the alarm. Note that if the alarm is reset while any run commands are set to on, the inverter may supply the power to the motor which may cause the motor to rotate.

Injury may occur.

- Even though the inverter has interrupted power to the motor, if the voltage is applied to the main circuit power input terminals L1/R, L2/S and L3/T, voltage may be output to inverter output terminals U, V, and W.
- Before setting up any internal control switches, turn OFF the power and wait more than five minutes. Further, check that the charge lamp is unlit and make sure that the DC link bus voltage between the terminals P (+) and N (-) has dropped below the safe voltage level (25 VDC) using a multimeter or a similar instrument**.**

Electric shock may occur.

Follow the procedure below to solve problems.

(1) First, check that the inverter is correctly wired, referring to Chapter 2, Section 2.3.6 "Wiring for main circuit terminals and grounding terminals."

(2) Check whether an alarm code is displayed on the LED monitor.

- No alarm code appears on the LED monitor
  - Abnormal motor operation → Go to Section 6.2.1
    - [1] The motor does not rotate.
    - [2] The motor rotates, but the speed does not increase.
    - [3] The motor runs in the opposite direction to the command.
    - [4] If the speed variation and current vibration (such as hunting) occur at the constant speed
    - [5] If grating sound can be heard
    - [6] The motor does not accelerate and decelerate at the set time.
  - Problems with inverter settings → Go to Section 6.2.2
    - [1] Nothing appears on the LED monitor.
    - [2] Data of function codes cannot be changed
- If an alarm code appears on the LED monitor → Go to Section 6.3
- If an abnormal pattern appears on the LED monitor while no alarm code is displayed → Go to Section 6.4

If any problems persist after the above recovery procedure, contact your Fuji Electric representative.

6.2 If No Alarm Code Appears on the LED Monitor

6.2.1 Motor is running abnormally

[1] The motor does not rotate.

Possible Causes	What to Check and Suggested Measures
(1) No power supplied to the inverter.	Check the input voltage, output voltage and interphase voltage unbalance. ➔ Turn ON a molded case circuit breaker, an earth leakage circuit breaker (with overcurrent protection) or a magnetic contactor. ➔ Check for voltage drop, phase loss, poor connections, or poor contacts, and fix them if necessary. ➔ If only auxiliary control power is supplied, turn ON the main power.
(2) Neither forward run command nor reverse run command were inputted, or both run commands were inputted simultaneously (external signal operation).	Check the input status of the control circuit terminals [FWD] and [REV] with Menu 4 "I/O Checking" using the keypad. ➔ Input a run command. ➔ Set either ***FWD*** or ***REV*** to off if both run commands are being inputted. ➔ Correct the assignment of commands ***FWD*** and ***REV*** to function codes E98 and E99. ➔ Connect the external circuit wires to control circuit terminals [FWD] and [REV] correctly. ➔ Make sure that the sink/source slide switch on the printed circuit board is properly configured.
(3) A run command with higher priority than the one attempted was active, and the run command was stopped.	Check the higher priority run command with Menu 2 "Data Checking" and Menu 4 "I/O Checking" using the keypad. ➔ Correct any incorrect function code data settings in H30 or cancel the higher priority run command.
(4) The reference speed (pre-ramp) was set below the starting speed or stop speed.	Check that a reference speed (pre-ramp) has been entered, with Menu 4 "I/O Checking" using the keypad. ➔ Set the value of the reference speed (pre-ramp) to the same or higher than that of F23 (Starting Speed) or F25 (Stop Speed). ➔ Reconsider F23 (Starting Speed) or F25 (Stop Speed), and if necessary, change them to lower values. ➔ Inspect the speed command sources, speed controller, signal converters, switches, or relay contacts. Replace any ones that are faulty. ➔ Connect the external circuit wires correctly to terminals [12], [11], [C1], and [V2] (analog speed command operation).
(5) A reference speed command with higher priority than the one attempted was active.	Check the higher priority reference speed command setting with Menu 2 "Data Checking" and Menu 4 "I/O Checking" using the keypad, referring to the block diagram of the reference speed command generator*. *Refer to the FRENIC-Lift Reference Manual (INR-SI47-1068-E), Chapter 1. ➔ Correct any incorrect function code data settings (e.g. cancel the higher priority reference speed command).
(6) The enable coast-to-stop command was effective.	Check the data of function codes E01, E02, E03, E04, E05, E06, E07, E08, E98 and E99 and the input signal status with Menu 4 "I/O Checking" using the keypad. ➔ Release the enable coast-to-stop command setting.
(7) EN terminal circuit opens.	Check the EN terminal state with I/O check menu using the keypad. ➔ Close the EN terminal circuit.
(8) Broken wire, incorrect connection or poor contact with the motor.	Check the cabling and wiring (Measure the output current). ➔ Repair the wires to the motor or replace them.

Possible Causes	What to Check and Suggested Measures
(9) Overload	Measure the output current. ➔ Lighten the load or change the inverter for an upper size.
	Check that a mechanical brake is in effect. ➔ Release the mechanical brake.
(10) Torque generated by the motor was insufficient.	Check the data of function codes F04, F05, and P01 to P12. ➔ Change the function code data to match the motor's characteristics.
(11) Miss-/weak-connection of the DC reactor (DCR)	Check the wiring connection. ➔ Connect the DC reactor correctly. Repair or replace wires for the DC reactor.

[2] The motor rotates, but the speed does not increase.

Possible Causes	What to Check and Suggested Measures
(1) The maximum speed was set to too low a value.	Check the data of function code F03 (Maximum Speed). ➔ Readjust the data of F03 (Maximum Speed).
(2) The reference speed (pre-ramp) command was set to too low a value.	Check the signals for the reference speed (pre-ramp) command from the control circuit terminals with Menu 4 "I/O Checking" using the keypad. ➔ Increase the reference speed (pre-ramp). ➔ If an external potentiometer for speed command source, signal converter, switches, or relay contacts are malfunctioning, replace them. ➔ Connect the external circuit wires to terminals [12], [11], [C1], and [V2] correctly.
(3) A reference speed command with higher priority than the one attempted was active and the reference speed was set to too low a value.	Check the settings (data) of the relevant function codes and what speed commands are being received, through Menu 1 "Data Setting," Menu 2 "Data Checking" and Menu 4 "I/O Checking," using the keypad and referring to the block diagram of the speed command source. *Refer to the FRENIC-Lift Reference Manual (INR-SI47-1068-E), Chapter 1. ➔ Correct any incorrect function code data settings (e.g. cancel higher priority speed commands, etc.).
(4) The acceleration time was too long or too short.	Check acceleration time-related data of function codes. ➔ Change the acceleration/deceleration time to match the load.
(5) Overload	Measure the output current. ➔ Lighten the load or change the inverter for an upper size.
	Check if mechanical brake is working. ➔ Release the mechanical brake.
(6) Mismatch with the characteristics of the motor	Check whether P01, P02, P03, P06, P07, P08, P09, P10, and P12 agree with the parameters of the motor. ➔ Set P02 and P03 properly and auto-tune the inverter for the motor according to P04 data.
(7) The output speed did not increase due to the current limiting operation.	Check data of F44 (current limiter (operation level)). ➔ Set data of F44 correctly, or set 999 to F44 if no current limit is needed.
	Check the data of function codes F04, F05, P01, and P12 to ensure that the V/f pattern is right. ➔ Match the V/f pattern values with the motor ratings. ➔ Set P02 and P03 properly and auto-tune the inverter for the motor according to P04 data.
(8) Offset and grain data was set incorrectly.	Check the data of function codes C31, C32, C36, C37, C41, and C42. ➔ Readjust the offset and gain to appropriate values.
(9) Miss-connection of the pulse encoder	Check the wiring. ➔ Rewire to [P0], [PA], [PB], [PZ] and [CM] terminals.

Possible Causes	What to Check and Suggested Measures
(10) Miss-setting of pulse count of the encoder	Check the magnet pole angle detection data of L02 (Pulse Encoder (Resolution)). ➔ Set up L02 for correct data.

[3] The motor runs in the opposite direction to the command.

Possible Causes	What to Check and Suggested Measures
(1) Wiring has been connected to the motor incorrectly.	Check the wiring to the motor. ➔ Connect terminals U, V, and W of the inverter to the respective U, V, and W terminals of the motor.
(2) Incorrect connection and settings for run commands and rotation direction command ***FWD*** and ***REV***	Check the data of function codes E98 and E99 and the connection to terminals [FWD] and [REV]. ➔ Correct the data of the function codes and the connection.
(3) Miss-connection of the pulse encoder	Check the wiring. ➔ Rewire to [P0], [PA], [PB], [PZ] and [CM] terminals.
	Check whether the feedback signal from the pulse encoder is satisfies following requirements. • When the inverter runs with ***FWD*** command, a rising edge of [PA] is in the time fame while [PB] is kept in the high level. • When the inverter runs with ***REV*** command, a rising edge of [PA] is in the time frame while [PB] is kept in the low level. ➔ If not, interchange the signal wires between [PA] and [PB].

[4] If the speed variation and current vibration (such as hunting) occur at the constant speed

Possible Causes	What to Check and Suggested Measures
(1) The reference speed (pre-ramp) fluctuated.	Check the signals for the speed command with Menu 4 "I/O Checking" using the keypad. ➔ Increase C33, C38, and C43 (Analog Input Adjustment for Terminal [12], [C1] and [V2] (Filter time constant)) for the speed command.
(2) The external speed command source device was used.	Check that there is no noise in the control signal wires from external sources. ➔ Isolate the control signal wires from the main circuit wires as far as possible. ➔ Use shielded or twisted wires for the control signal.
	Check whether the speed command source has not failed because of noise from the inverter. ➔ Connect a capacitor to the output terminals of the speed command source or pass the signal wire through a ferrite core. (Refer to Chapter 2 Section 2.3.7 "Wiring for control circuit terminals.")
(3) Speed switching or multistep speed command was enabled.	Check whether the relay signal for switching the speed command is chattering. ➔ If any weak contact is in the relay, replace the relay. ➔ Reconfigure function codes E18 (Operation Command and Multistep Speed Agreement Timer (Mode)) and E19 (Timer).
(4) Signal cable from the pulse encoder picks noises up.	Check the termination of shielded sheath of the pulse encoder cable. ➔ Ground the shielded sheath at the motor side. ➔ Connect it to the inverter's [CM] terminal. ➔ Raise L10 (Filter Time Constant for Speed Detection).

Possible Causes	What to Check and Suggested Measures
(5) The machinery having low stiffness in a load causes hunting, or the output current is oscillatory due to irregular motor parameters.	Check data of function codes auto speed regulator (ASR). ➔ Decrease L36 (ASR (P constant at high speed)) and L38 (ASR (P constant at low speed)). ➔ Increase L37 (ASR (I constant at high speed)) and L39 ASR ((I constant at low speed)).
	Check that the motor vibration is suppressed if you decrease level of F26 (Motor Sound (Carrier frequency)). ➔ Decrease level of F26 (Motor Sound (Carrier frequency)).

[5] If grating sound can be heard from the motor

Possible Causes	What to Check and Suggested Measures
(1) The carrier frequency was set too low.	Check the data of function codes F26 (Motor Sound (Carrier frequency)). ➔ Increase F26 (Motor Sound (Carrier frequency)).
(2) The ambient temperature of the inverter was too high (when automatic lowering of the carrier frequency was enabled by H98).	Measure the temperature inside the enclosure of the inverter. ➔ If it is over 40 , lower it by improving the ventilation. ➔ Lower the temperature of the inverter by reducing the load. Note) If you set H98 (bit0 = 0), an *0h1, 0h3,* or *0hu* alarm may occur.
(3) Resonance with the load	Check the precision of the mounting of the load or check whether there is resonance with the enclosure or likes. ➔ Disconnect the motor and run it without the inverter, and determine where the resonance comes from. Upon locating the cause, improve the characteristics of the source of the resonance.

[6] The motor does not accelerate and decelerate at the set time.

Possible Causes	What to Check and Suggested Measures
(1) Selected S-curve accel./decel. pattern miss-matches with the mutistep speed command.	Check the related function code data and the issuing timing of the multistep speed command. ➔ Check and correct F07, F08, and E10 to E17 (Acceleration/Deceleration Time), L11 to L18 (Multistep Speed Command Combination), and L19 to L28 (S-curve Setting).
(2) The speed was controlled, because the current limit operated.	Check that the setting of F44 (Current limiter (Level)) is reasonable. ➔ Readjust the setting of F44 to appropriate value. ➔ Increase the acceleration/deceleration time. ➔ Correct P12 (Motor (Rated slip)).
(3) Overload	Measure the output current. ➔ Lighten the load or change the inverter for an upper size.
(4) Torque generated by the motor was insufficient.	Check the data of motor parameters. ➔ Match data of F04, F05, and P01 to P12 with data on the motor rating plate.
(5) An external speed command source is being used.	Check that there is no noise superimposed on the external signal wires. ➔ Isolate the control signal wires from the main circuit wires as far as possible. ➔ Use shielded wire or twisted wire for the control signal wires. ➔ Connect a capacitor to the output terminals of the speed command source or pass the signal wire through a ferrite core. (Refer to Chapter 2 Section 2.3.7 "Wiring for control circuit terminals.") ➔ Check and correct the filter time constant. ➔ Check and correct F07 and F08 (Acceleration/Deceleration Time).

Possible Causes	What to Check and Suggested Measures
(6) The V2/PTC switch was turned to PTC (when [V2] was being used).	Check whether control terminal [V2] is not set to the PTC thermistor input mode. Confirm SW4. (Refer to Chapter 2 Section 2.3.8 "Setting up slide switches.") ➔ Turn the V2/PTC switch on the printed circuit board to V2.

6.2.2 Problems with inverter settings

[1] Nothing appears on the multi-function keypad.

Possible Causes	What to Check and Suggested Measures
(1) No power supplied to the inverter (main circuit power, auxiliary power for control circuit).	Check the power supply and measure the input voltage. ➔ Turn on the molded case circuit breaker, earth leakage circuit breaker (with overcurrent protection) or magnetic contactor on the primary circuit. ➔ Check for voltage drop, phase loss, weak connections, or weak contacts, and fix them if necessary.
(2) The power for the control circuit did not reach a high enough level.	Check if the short bar has been removed between terminals [P1] and [P (+)] or if there is poor contact between the short bar and the terminals. ➔ Connect the short bar or DC reactor between terminals [P1] and [P (+)] or retighten the screws.
(3) The keypad was not properly connected to the inverter.	Check whether the keypad is properly connected to the inverter. ➔ Remove the keypad, put it back, and see whether the problem persists. ➔ Replace the keypad with another one and check whether the problem persists.
	When running the inverter at a remote site, ensure that the extension cable is securely connected both to the keypad and to the inverter. ➔ Disconnect the cable, reconnect it, and see whether the problem persists. ➔ Replace the keypad with another one and check whether the problem persists.

[2] Data of function codes cannot be changed

Possible Causes	What to Check and Suggested Measures
(1) An attempt was made to change function code data that cannot be changed when the inverter is running.	Check if the inverter is running with Menu 3 "Drive Monitoring" using the keypad and then confirm whether the data of the function codes can be changed when the motor is running by referring to the function code tables. ➔ Stop the motor then change the data of the function codes.
(2) The data of the function codes is protected or in the password-protected state.	Check the data of function code F00 (Data Protection). ➔ Change the data of F00 from "1" to "0." ➔ If the inverter is in password-protected state, set the password up into F00.
(3) The FUNC/DATA key was not pressed.	Check whether you have pressed the FUNC/DATA key after changing the function code data. ➔ Press the FUNC/DATA key after changing the function code data.

6.3 If an Alarm Code Appears on the LED Monitor

■ Quick reference table of alarm codes

Alarm code	Name	Refer to	Alarm code	Name	Refer to
0c1	Overcurrent	6-7	er1	Memory error	6-12
0c2			er2	Keypad communications error	6-12
0c3			er3	CPU error	6-12
0u1	Overvoltage	6-8	er4	Option communications error	6-13
0u2			er5	Option error	6-13
0u3			er6	Operation error	6-13
lu	Undervoltage	6-8	er7	Tuning error	6-13
lin	Input phase loss	6-9	er8	RS485 communications error	6-14
0h1	Heat sink overheat	6-9	erh	Hard ware error	6-15
0h2	External alarm	6-10	ecf	EN circuit fault	6-15
0h3	Internal air overheat	6-10	p9	Broken wiring in the PG	6-16
0h4	Motor protection (PTC thermistor)	6-10	ert	CAN communications error	6-16
0l1	Motor overload	6-11	0s	Over speed error	6-16
0lu	Inverter overload	6-11	ere	Speed mismatching (Out of speed control)	6-17

[1] 0cn Overcurrent

Problem The inverter momentary output current exceeded the overcorrect level.

OC1 Overcurrent occurred during acceleration.

OC2 Overcurrent occurred during deceleration.

OC3 Overcorrect occurred when running at a constant speed.

Possible Causes	What to Check and Suggested Measures
(1) The inverter output terminals were short-circuited.	Remove the wires connected to the inverter output terminals (U, V, and W) and measure the interphase resistance of the wires. Check if the resistance is too low. ➔ Remove the part that short-circuited (including replacement of the wires, relay terminals and motor).
(2) Ground faults occurred at the inverter output terminals.	Remove the wires connected to the inverter output terminals (U, V, and W) and perform a Megger test. ➔ Remove the part that short-circuited (including replacement of the wires, relay terminals and motor).
(3) Loads were too heavy.	Measure the motor current with a measuring device, and to trace the current trend. Therefore, use this information to judge if the trend is over the calculated load value for your system design. ➔If the load is too heavy, change the inverter for an upper size.
	Trace the current trend and check if there are any sudden changes in the current. ➔ Change the inverter for an upper size.

Possible Causes	What to Check and Suggested Measures
(4) The acceleration/ deceleration time was too short.	Check that the motor generates enough torque required during acceleration/deceleration. That torque is calculated from the moment of inertia for the load and the acceleration/deceleration time. ➔ Increase F07, F08, and E10 to E17 (Acceleration/Deceleration Time). ➔ Change the inverter for an upper size.
(5) A high intensity noise was given to the inverter.	Check if noise control measures are appropriate (e.g., correct grounding and routing of control and main circuit wires). ➔ Take the countermeasure to noises. ➔ Insert a surge absorber into a noise source such as an activation coil of MC or electro-magnetic solenoids.
(6) Invalid motor parameters set.	Check the motor parameters (P codes). ➔ Correct the motor parameters by replacing with printed ones on the motor nameplate

[2] *Oun* Overvoltage

Problem The DC link bus voltage was over the detection level of overvoltage.

OU1 Overvoltage occurs during the acceleration.

OU2 Overvoltage occurs during the deceleration.

OU3 Overvoltage occurs during running at constant speed.

Possible Causes	What to Check and Suggested Measures
(1) The power supply voltage was over the range of the inverter's specifications.	Measure the input voltage. ➔ Decrease the voltage to within that of the specifications.
(2) A surge current entered the input power source.	If within the same power source a phase-advancing capacitor is turned ON or OFF or a thyristor converter is activated, a surge (temporary precipitous rise in voltage or current) may be caused in the input power. ➔ Install a DC reactor.
(3) The deceleration time was too short compared with the inertia of the load.	Calculate the deceleration time from the inertia of the load and the braking torque again. ➔ Increase the deceleration time.
(4) Braking load was too heavy.	Compare the braking torque of the load with that of the inverter. ➔ Select a minimum resistance braking resistor connectable to the inverter. ➔ Change the inverter for an upper size.
(5) A high intensity noise was given to the inverter.	Check if noise control measures are appropriate (e.g., correct grounding and routing of control and main circuit wires). ➔ Take the countermeasure to noises. ➔ Insert a surge absorber into a noise source such as an activation coil of MC or electro-magnetic solenoids.
(6) No connected braking resistor	Check whether the braking resistor is connected to the inverter correctly. ➔ Check the braking resistor is connected to terminals P (+) and DB correctly. Or, retighten screws/nuts. ➔ Check whether any terminal bites the wire sheath. If so correct it.

[3] *lu* Undervoltage

Problem DC link bus voltage was below the undervoltage detection level.

Possible Causes	What to Check and Suggested Measures
(1) A momentary power failure occurred.	➔ Reset the alarm.

Possible Causes	What to Check and Suggested Measures
(2) The power supply voltage did not reach the range of the inverter's specifications.	Measure the input voltage. ➔ Increase the voltage to within that of the specifications.
(3) Peripheral equipment for the power circuit malfunctioned, or the connection was incorrect.	To locate the peripheral equipment malfunctioned or incorrect connection, measure the input voltage. ➔ Replace any faulty peripheral equipment or correct any incorrect connections.
(4) Other loads were connected to the same power source and required a large current to start running to the extent that it caused a temporary voltage drop on the supply side.	Measure the input voltage and check the voltage variation. ➔ Reconsider the power system configuration.
(5) Inverter's inrush current caused the power voltage drop because power transformer capacity was insufficient.	Check if the alarm occurs when you switch on a molded case circuit breaker, an earth leakage circuit breaker (with overcurrent protection) or a magnetic contactor. ➔Reconsider the capacity of the power source transformer.

[4] *lin* Input phase loss

Problem Input phase loss occurred, or interphase voltage unbalance rate was large.

Possible Causes	What to Check and Suggested Measures
(1) Main circuit power input wires broken.	Measure the input voltage. ➔ Repair or replace the wires.
(2) The terminal screws for the main circuit power input of the inverter were not tight enough.	Check if the screws on the inverter input terminals have become loose. ➔ Tighten the terminal screws to the recommended torque.
(3) Interphase unbalance rate of three-phase voltage was too large.	Measure the input voltage. ➔ Change the inverter for an upper size.
(4) Overload cyclically occurred.	Measure ripple wave of DC link circuit voltage. ➔ If the ripple is large, raise the inverter capacity.

Note You can disable input phase loss protection using the function code H98.

[5] *Oh1* Cooling fin overheat

Problem Temperature around heat sink rose.

Possible Causes	What to Check and Suggested Measures
(1) Temperature around the inverter exceeded that of inverter specifications.	Measure the temperature around the inverter. ➔ Lower the temperature around the inverter (e.g., ventilate the enclosure well).
(2) Air vent is blocked.	Check if there is sufficient clearance around the inverter. ➔ Increase the clearance.
	Check if the heat sink is not clogged. ➔ Clean the heat sink.

Possible Causes	What to Check and Suggested Measures
(3) Cumulative running time of the cooling fan exceeded the standard period for replacement, or the cooling fan malfunctioned.	Check the cumulative running time of the cooling fan. ➔ Replace the cooling fan.
	Visually check whether the cooling fan rotates abnormally. ➔ Replace the cooling fan.
(4) Load was too heavy.	Measure the output current. ➔ Decease F26 (Motor Sound (Carrier frequency)).

[6] *Oh2* External alarm

Problem External alarm was inputted ***THR***.
(in case external alarm ***THR*** is assigned to one of digital input terminals [X1] through [X8], [FWD], or [REV])

Possible Causes	What to Check and Suggested Measures
(1) An alarm function of the external equipment was activated.	Inspect external equipment operation. ➔ Remove the cause of the alarm that occurred.
(2) Incorrect connection.	Check if the wire for the external alarm signal is correctly connected to the terminal to which the "Trip command (External failure)" has been assigned (Any of E01, E02, E03, E04, E05, E06, E07, E08, E98, and E99 is set to "9."). ➔ Connect the wire for the alarm signal correctly.
(3) Incorrect settings.	Check whether the " Trip command (External failure)" has not been connected to an unassigned terminal (None of E01, E02, E03, E04, E05, E06, E07, E08, E98, and E99). ➔ Correct the assignment.
	Check whether the logic assignment (normal/negative) of the external signal agrees with that of thermal command ***THR*** assigned by any of E01, E02, E03, E04, E05, E06, E07, E08, E98, and E99. ➔ Ensure that logic agrees each other.

[7] *Oh3* Inverter inside overheat

Problem The temperature inside the inverter exceeded the allowable limit.

Possible Causes	What to Check and Suggested Measures
(1) The ambient temperature exceeded the allowable limit specified for the inverter.	Measure the ambient temperature. ➔ Lower the ambient temperature by improving the ventilation of the system enclosure or the like.

[8] *Oh4* Motor protection (PTC thermistor)

Problem Temperature of the motor rose abnormally.

Possible Causes	What to Check and Suggested Measures
(1) Temperature around the motor exceeded that of motor specifications.	Measure the temperature around the motor. ➔ Lower the temperature.
(2) Cooling system for the motor malfunctioned.	Check if the cooling system of the motor is operating normally. ➔ Repair or replace the cooling system of the motor.

Possible Causes	What to Check and Suggested Measures
(3) Load was too heavy.	Measure the output current. ➔ Lower the temperature around the motor. ➔ Increase F26 (Motor Sound (Carrier frequency)).
(4) The set operation level (H27) of the PTC thermistor for overheat protection was inadequate.	Check the thermistor specifications and recalculate the detection voltage. ➔ Reconsider the data of function code H27 (PTC Thermistor Input (Level)).
(5) A PTC thermistor and pull-up resistor were connected incorrectly or the resistance was inadequate.	Check the connection and the resistance of the pull-up resistor. ➔ Correct the connections and replace the resistor with one with an appropriate resistance.
(6) The V/f pattern did not match the motor.	Check whether data of function codes F04, F05, and P01 to P12 match the values on the nameplate on the motor. ➔ Match the function code data to the values on the nameplate of the motor. ➔ After the setup of P02 and P03 auto-tune the inverter for the motor by P04.
(7) Wrong settings	Although no PTC thermistor is used, the V2/PTC switch is turned to PTC, which means that the thermistor input is active on the PTC (H26). ➔ Set H26 (PTC Thermistor Input (Mode)) to "0" (Disable).

[9] *OI1* Motor overload

Problem Electronic thermal function for motor overload detection was activated.

Possible Causes	What to Check and Suggested Measures
(1) The characteristics of electronic thermal motor protection did not match those of the motor overload.	Check the motor characteristics. ➔ Reconsider the data of function codes F10 and F12. ➔ Use an external thermal relay.
(2) Activation level for the electronic thermal motor protection was inadequate.	Check the continuous allowable current of the motor. ➔ Reconsider and change the data of function code F11.
(3) Load was too heavy.	Measure the output current. ➔ Review characteristics or properties of the machinery.

[10] *Olu* Inverter overload

Problem Temperature inside inverter rose abnormally.

Possible Causes	What to Check and Suggested Measures
(1) Temperature around the inverter exceeded that of inverter specifications.	Measure the temperature around the inverter. ➔ Lower the temperature (e.g., ventilate the enclosure well).
(2) Load was too heavy.	Measure the output current. ➔ Decrease F26 (Motor Sound (Carrier frequency)).
(3) Air vent is blocked.	Check if there is sufficient clearance around the inverter. ➔ Increase the clearance.
	Check if the heat sink is not clogged. ➔ Clean the heat sink.

Possible Causes	What to Check and Suggested Measures
(4) The service life of the cooling fan has expired or the cooling fan malfunctioned.	Check the cumulative running time of cooling fan. ➔ Replace the cooling fan.
	Visually check that the cooling fan rotates normally. ➔ Replace the cooling fan.

[11] *er1* Memory error

Problem Error occurred in writing the data to the memory in the inverter.

Possible Causes	What to Check and Suggested Measures
(1) While the inverter was writing data (especially initializing data or copying data), power supply was turned OFF and the voltage for the control circuit dropped.	Check whether pressing the RESET key can reset the alarm after the function code data are initialized by setting the data of H03 to 1. ➔ Return the initialized function code data to their previous settings, and restart the operation.
(2) A high intensity noise was given to the inverter while data (especially initializing data) was being written.	Check if appropriate noise control measures have been implemented (e.g., correct grounding and routing of control and main circuit wires). Also, perform the same check as described in (1) above. ➔ Improve the countermeasure to noises. Alternatively, return the initialized function code data to their previous settings, and restart the operation.
(3) The control circuit failed.	Initialize the function code data by setting H03 to 1, and reset the alarm by pressing the RESET key and check that the alarm goes on. ➔ This problem was caused by a failure of the printed circuit board (PCB) (on which the CPU is mounted). Contact your Fuji Electric representative.

[12] *er2* Keypad communications error

Problem A communications error occurred between the keypad and the inverter.
(When the inverter is running in the local mode.)

Possible Causes	What to Check and Suggested Measures
(1) Break in the communications cable or poor contact.	Check continuity of the cable, contacts and connections. ➔ Re-insert the connector firmly. ➔ Replace the cable.
(2) A high intensity noise was given to the inverter.	Check if appropriate noise control measures have been implemented (e.g., correct grounding and routing of control and main circuit wires). ➔ Improve the countermeasure to noises.
(3) The keypad malfunctioned.	Check that alarm *er2* does not occur if you connect another keypad to the inverter. ➔ Replace the keypad.

[13] *er3* CPU error

Problem A CPU error (e.g. erratic CPU operation) occurred.

Possible Causes	What to Check and Suggested Measures
(1) A high intensity noise was given to the inverter.	Check if appropriate noise control measures have been implemented (e.g., correct grounding and routing of control and main circuit wires). ➔ Improve the countermeasure to noises.

[14] *er4* Option communications error

Problem A communications error occurred between the option card and the inverter.

Possible Causes	What to Check and Suggested Measures
(1) There was a problem with the connection between the bus option card and the inverter.	Check whether the connector on the bus option card is properly mating with the connector of the inverter. ➔ Reload the bus option card into the inverter.
(2) There was a high intensity noise from outside.	Check whether appropriate noise control measures have been implemented (e.g. correct grounding and routing of control and main circuit wires and communications cable). ➔ Improve the countermeasure to noises.
(3) Any faults is in the wiring connection between the pulse encoder and the option card.	Check whether the pulse encoder and the option card are wired each other correctly. ➔ Wire them correctly.

[15] *er5* Option error

Problem Option card-related error occurs.

Possible Causes	What to Check and Suggested Measures
(1) The pulse encoder is broken.	➔ Replace the pulse encoder for new one.
(2) Wrong pulse encoder is connected.	Check whether the pulse encoding is specified within encoder specifications described in the option card instruction manual. ➔ Replace the pulse encoder for a correct one.
(3) Any faults is in the wiring connection between the pulse encoder and the option card.	Check whether the pulse encoder and the option card are wired each other correctly. ➔ Wire them correctly.

[16] *er6* Run operation error

Problem You incorrectly operated the inverter.

Possible Causes	What to Check and Suggested Measures
(1) Wrong setup of multistep speed commands	Check whether all function codes of L11 to L18 (Multistep Speed Command Combination) are configured with different data each other. ➔ Reconfigure the commands.
(2) The brake does not follow the brake command.	Check whether the brake status signal ***BRKE*** input agrees with the brake command ***BRKS***. ➔ Reconfigure L84 (Brake Control (Brake check time)).

[17] *er7* Tuning error

Problem Auto-tuning failed.

Possible Causes	What to Check and Suggested Measures
(1) A phase was missing (There was a phase loss) in the connection between the inverter and the motor.	➔ Properly connect the motor to the inverter. ➔ If any contactor is inserted between the inverter and motor, turn the contactor on anytime while tuning.
(2) V/f or the rated current of the motor was not properly set.	Check whether the data of function codes F04, F05, P02, and P03 agrees with the specifications of the motor.
(3) The rated capacity of the motor was significantly different from that of the inverter.	Check whether the rated capacity of the motor is smaller than that of the inverter by three or more orders of class or larger by two or more sizes in capacity. ➔ Review the inverter capacity. ➔ Set motor parameters (P06, P07, P08, and P12) up manually.
(4) The motor was a special type.	➔ Set motor parameters (P06, P07, P08, and P12) up manually.
(5) Wrong sequence operation.	➔ Do not turn the [EN] terminal OFF while tuning. ➔ Do not turn the run command OFF while tuning. ➔ Do not press the STOP key ON the keypad while tuning. ➔ Do not turn the enable coast-to-stop command ***BX*** ON while tuning. ➔ Do not turn the force to decelerate command ***DRS*** OFF while tuning.
(6) Excessive overcurrent is flown.	Check whether any wires between the inverter and the motor is short-circuited or ground-faulted. ➔ Remove the fault factor/s.
	Check whether data of function codes (F04, F05, P02, and P03) agrees with motor specifications. ➔ Correct the mismatch data.

📖 For details of tuning errors, refer to “Errors during Tuning” in Chapter 4, Section 4.1.3 “Preparation before running the motor for a test – Setting function code data.”

[18] *er8* RS485 communications error

Problem A communications error occurred during RS485 communications.

Possible Causes	What to Check and Suggested Measures
(1) Conditions for communications differ between the inverter and host equipment.	Compare the settings of the y codes (y01 to y10) with those of the host equipment. ➔ Correct any settings that differ.
(2) Even though y08 (no response error detection time) has been set, communications is not performed within the specified cycle.	Check the host equipment. ➔ Change the settings of the host equipment software, or make the no response error detection time be ignored (y08=0).
(3) Host equipment (e.g., PLCs and personal computers) did not operate due to incorrect settings and/or defective software/hardware.	Check the host equipment. ➔ Remove the cause of the equipment error.
(4) Converters (e.g., RS485 converter) did not operate due to incorrect connections and settings, or defective hardware.	Check the RS485 converter (e.g., check for poor contact). ➔ Change the various RS485 converter settings, reconnect the wires, or replace hardware (such as recommended devices) as appropriate.
(5) Broken communications cable or poor contact.	Check continuity of the cable, contacts and connections. ➔ Replace the cable.
(6) A high intensity noise was given to the inverter.	Check if appropriate noise control measures have been implemented (e.g., correct grounding and routing of control and main circuit wires). ➔ Improve the countermeasure to noises. ➔ Improve the countermeasure to noises on the host side. ➔ Replace the RS485 level converter with a recommended insulated converter.

[19] *erh* Hardware error

Problem The inverter does not detect an option card.

Possible Causes	What to Check and Suggested Measures
(1) The option card is broken.	You need to replace the option card. ➔ Consult your Fuji Electric representative.

[20] *ecf* EN terminal circuit failure

Problem The detection circuit for EN terminal signal is broken.

Possible Causes	What to Check and Suggested Measures
(1) The circuit is broken.	You need to replace the control printed circuit board (CPCB.) ➔ Consult your Fuji Electric representative.

[21] *p9* PG disconnection error

Problem Any pulse encoder signal wires is broken.

Possible Causes	What to Check and Suggested Measures
(1) Any wire between the pulse encoder and the option card is broken.	Check whether the pulse coder is correctly connected to the option card. ➔ Check that the pulse encoder signals are wired to the option card's terminals specified by the instruction manual. If so, retighten the fixing screws. ➔ Check that any terminal bites the wire sheath. If so correct it.
(2) A high intensity noise was given to the inverter.	Check if appropriate noise control measures have been implemented (e.g., correct grounding and routing of control and main circuit wires). ➔ Improve the countermeasure to noises. ➔ Separate the control wires as far from the main power wires as possible.

[22] *ert* CAN communications error

Problem A communications error occurred during CAN communications.

Possible Causes	What to Check and Suggested Measures
(1) Wrong transmission speed	Check the transmission speed consistency between the inverter (y24) and host equipment. ➔ Correct the mismatch if any.
(2) Host equipment malfunction in hardware, operating system, or their configuration	Review the host equipment. ➔ Remove or repair the error factor/s in the host equipment.
(3) Disconnection or weak connection of the communications cable	Check that cable conductivity and contact state at the connector in each counterpart. ➔ Replace the communications cable.
(4) A high intensity noise was given to the inverter.	Check if appropriate noise control measures have been implemented (e.g., correct grounding and routing of control and main circuit wires). ➔ Improve the countermeasure to noises. ➔ Improve the countermeasure to noises on the host side..

[23] *Os* Over speed error

Problem The motor runs in excess-speed (where Motor speed ≥ (F03 × 1.2))

Possible Causes	What to Check and Suggested Measures
(1) Wrong configuration	Check relationship between set data for P01 (Motor (number of poles)) and L02 (Pulse Encoder (Resolution)). ➔ Set data of P01 up so as to agree with the motor parameter. ➔ Set data of L02 up so as to agree with the encoder resolution.
	Check data of F03 (Maximum Speed). ➔ Set data of F03 so as to agree with the motor running speed.
(2) A high intensity noise was given to the inverter.	Check if appropriate noise control measures have been implemented (e.g., correct grounding and routing of control and main circuit wires). ➔ Improve the countermeasure to noises.
(3) An external speed controller is used.	Check whether signal cable from the external controller picks noises up. ➔ Separate the control wires as far from the main power wires as possible. ➔ Use a shielded or twisted-pair wire for the control signal wiring connection.
	Check whether noises from the inverter affect the speed controller to malfunction. ➔ Connect a noise suppressor capacitor between the controller output terminals or pass the signal wire through a ferrite core.

[24] *ere* Out of control speed

Problem An out of control error (PG failure) occurs between the speed command and the speed feedback.

Possible Causes	What to Check and Suggested Measures
(1) Wrong configuration	Check data of function code L90, L91, and L92. ➔ If the speed fluctuation is within the allowable range, then set data of L90 (PG Error Detection (Mode)) up to 0. ➔ Widen L91 (PG Error Detection (Detection level)). ➔ Lengthen L92 (PG Error Detection (Detection time)).
	Check relationship between set data for P01 (Motor (number of poles)) and L02 (Pulse Encoder (Resolution)). ➔ Set data of P01 up so as to agree with the motor parameter. ➔ Set data of L02 up so as to agree with the encoder resolution.
(2) Overload	Measure the output current. ➔ Lower the load.
	Check whether the mechanical brake is activated. ➔ Release it.
(3) Output speed cannot increase by a reaction of the current limiter.	Check data of F44 (Current Limiter (Level)). ➔ Change data of F44 so as to agree with desired operations, or set it up to 999 if no speed limiting is needed.
	Check whether the V/f pattern is correctly profiled in function codes, F04, F05, and P01 to P12. ➔ Make the V/f pattern match the motor rating. ➔ Change the V/f pattern so as to agree with the motor used.
(4) Wrong motor parameters	Check data of function codes, P01, P02, P03, P06, P07, P09, P10, and P12 agrees with parameters of the motor. ➔ Set P02 and P03 properly and auto-tune the inverter for the motor according to P04 data.
(5) Miss-connection of the pulse encoder	Check the wiring. ➔ Rewire to [P0], [PA], [PB], [PZ] and [CM] terminals.
	Check whether the feedback signal from the pulse encoder is satisfies following requirements. • When the inverter runs with ***FWD*** command, a rising edge of [PA] is in the time fame while [PB] is kept in the high level. • When the inverter runs with ***REV*** command, a rising edge of [PA] is in the time frame while [PB] is kept in the low level. ➔ If not, interchange the signal wires between [PA] and [PB].
(6) Wiring has been connected to the motor incorrectly.	Check the wiring to the motor. ➔ Connect terminals U, V, and W of the inverter to the respective U, V, and W terminals of the motor.
(6) Gain of auto speed regulator (ASR) was too big or small.	➔ Reconfigure L36 to L39 (ASR).

6.4 If an Abnormal Pattern Appears on the LED Monitor while No Alarm Code is Displayed

[1] – – – – (center bar) appears

Problem A center bar (– – – –) has appeared on the LCD monitor.

Possible Causes	What to Check and Suggested Measures
(1) Connection to the keypad was in weak connection.	Prior to proceed, check that pressing the FUNC DATA key does not take effect for the LED display. Check connectivity of the extension cable for the keypad used in remote operation. ➔ Replace the cable.

[2] _ _ _ _ (under bar) appears

Problem An under bar (_ _ _ _) appeared on the LED monitor when you pressed the FWD key or the REV key or entered a run forward command ***FWD*** or a run reverse command ***REV***. The motor did not start.

Possible Causes	What to Check and Suggested Measures
(1) The voltage of the DC link bus was low.	Select Menu 5 "Maintenance Information" in Programming mode on the keypad, and check the voltage of the DC link bus, which should be: 400 VDC or below for 3-phase 400V. ➔ Connect the inverter to a power supply that meets its input specifications.
(2) The main power is not ON, while the auxiliary input power to the control circuit is supplied.	Check that the main power is turned ON. ➔ If it is not ON, turn it ON.

Chapter 7 MAINTENANCE AND INSPECTION

Perform daily and periodic inspection to avoid trouble and keep reliable operation for a long time. Take care of the following items during work.

⚠WARNING

- Turn the power OFF and wait for more than five minutes, before starting inspection. Further, check that the LED monitor is unlit, and check the DC link bus voltage between the P (+) and N (-) terminals to be lower than 25 VDC.
  Electric shock may occur.
- Maintenance, inspection, and parts-replacement should be made only by authorized persons.
- Take off the wristwatch, rings and other metallic matter before starting work.
- Use insulated tools.
- Never modify the inverter.
  Electric shock or injuries could occur.

7.1 Daily Inspection

Visually inspect errors in the state of operation from the outside without removing the covers while the inverter operates or while it is turned ON.

- Check if the expected performance (satisfying the standard specification) is obtained.
- Check if the surrounding environment satisfies Chapter 2, Section 2.1 "Operating Environment."
- Check for abnormal noise, odor, or excessive vibration.
- Check for traces of overheating, discoloration and other defects.

7.2 Periodic Inspection

Perform periodic inspection by following the items of the list of periodic inspection in Table 7.1. Before performing periodic inspection, be sure to stop the motor, turn OFF the inverter, and shut down power supply. Then remove the covers of the control and main circuit terminal blocks.

Table 7.1 List of Periodic Inspections

Check part	Check item	How to inspect	Evaluation criteria
Environment	1) Check the ambient temperature, humidity, vibration and atmosphere (dust, gas, oil mist, or water drops). 2) Check if tools or other foreign matter or dangerous objects are left around the equipment.	1) Check visually or measure using apparatus. 2) Visual inspection	1) The standard specification must be satisfied. 2) No foreign or dangerous objects are left.
Voltage	Check if the voltages of the main and control circuit are correct.	Measure the voltages using a multimeter or the like.	The standard specification must be satisfied.

Table 7.1 Continued

Check part		Check item	How to inspect	Evaluation criteria
Structure such as frame and cover		1) Abnormal noise and excessive vibration 2) Loose screws (tightened parts) 3) Deformation and breakage 4) Discoloration and deformation caused by overheat 5) Check for foulness and dust.	1) Visual or hearing inspection 2) Retighten. 3), 4), 5) Visual inspection	1), 2), 3), 4), 5) No abnormalities
Main circuit	Common	1) Check if bolts and screws are tight and not missing. 2) Check the devices and insulators for deformation, cracks, breakage and discoloration caused by overheat and deterioration. 3) Check for foulness and dust.	1) Retighten. 2), 3) Visual inspection	1), 2), 3) No abnormalities
	Conductor and wire	1) Check the conductor for discoloration and distortion caused by overheat. 2) Check the sheath of the cable for cracks and discoloration.	1), 2) Visual inspection	1), 2) No abnormalities
	Terminal block	Check that the terminals are not damaged.	Visual inspection	No abnormalities
	Filtering capacitor	1) Check for electrolyte leakage, discoloration, cracks and swelling of the case. 2) Check if the safety valve does not protrude remarkably. 3) Measure the capacitance if necessary.	1),2) Visual inspection 3) Measure discharge time with capacitance probe.	1),2) No abnormalities 3) The discharge time is not shorter than time specified by the replacement manual.
	Magnetic contactor and relay	1) Check for chatters during operation. 2) Check for rough contacts.	1) Hearing inspection 2) Visual inspection	1), 2) No abnormalities
Control circuit	Printed circuit board	1) Check for loose screws and connectors. 2) Check for odor and discoloration. 3) Check for cracks, breakage, deformation and remarkable rust. 4) Check the capacitors for electrolyte leaks and deformation.	1) Retighten. 2) Smelling and visual inspection 3), 4) Visual inspection	1), 2), 3), 4) No abnormalities
Cooling system	Cooling fan	1) Check for abnormal noise and excessive vibration. 2) Check for loose bolts. 3) Check for discoloration caused by overheat.	1) Hearing and visual inspection, or turn manually (be sure to turn the power OFF). 2) Retighten. 3) Visual inspection	1) Smooth rotation 2), 3) No abnormalities
	Ventilation path	Check the heat sink, intake and exhaust ports for clogging and foreign matter.	Visual inspection	No abnormalities

If the inverter is stained, wipe it off with a chemically neutral cloth to remove dust, use a vacuum cleaner.

7.3 List of Periodical Replacement Parts

Each part of the product has its own service life that will vary according to the environmental and operating conditions. It is recommended that the following parts be replaced as specified below.

When the replacement is necessary, contact your Fuji Electric representative.

Table 7.2 Replacement Parts

Part name	Standard replacement intervals
DC link bus capacitor	7 years
Electrolytic capacitor on the printed circuit board	7 years
Cooling fan	4.5 years

(Note) These replacement intervals are based on the estimated service life of the inverter at an ambient temperature of 40 in 80 of the rated RMS current. In environments with an ambient temperature above 40 or a large amount of dust or dirt, the replacement intervals may need to be reduced.

7.3.1 Judgment on service life

(1) Viewing data necessary for judging service life; Measurement procedures

Through Menu 5 "Maintenance Information" in Programming mode, you can view on the optional multi-function keypad (option) various data (as a guideline) necessary for judging whether key components such as the DC link bus capacitor, the electrolytic capacitor on the printed circuit board, and the cooling fan are approaching their service life.

①-1 Measuring the capacitance of the DC link bus capacitor (in comparison with that at factory shipment)

Measure the capacitance of the DC link bus capacitor according to the procedure given below. The result will be displayed on the keypad as a ratio (%) to the initial capacitance at the time of factory shipment.

---------- **Procedure for measuring capacitance** ----------

1) To ensure validity in the comparative measurement, configure the condition of the inverter as follows.
   - Remove the option card (if already in use) from the inverter.
   - In case another inverter is connected via the DC link bus to the P(+) and N(-) terminals of the main circuit, disconnect the wires. (You do not need to disconnect a DC reactor (optional), if any.)
   - Disconnect power wires for the auxiliary input to the control circuit (R0, T0).
   - If the multi-function keypad is mounted, remove it.
   - Turn OFF all the digital input signals fed to terminals [FWD], [REV], [EN], and [X1] through [X8] of the control circuit.
   - If the encoder is wired at terminals (P0, PA, PB, and PZ (if any)), remove it..
   - If an external apparatus is attached to terminal [PLC], disconnect it.
   - Ensure that transistor output signals ([Y1] ─ [Y4]) and relay output signals ([Y5A/C] and [30A/B/C]) will not be turned ON.

     Note If negative logic is specified for the transistor output and relay output signals, they are considered ON when the inverter is not running. Specify positive logic for them.

   - Keep the ambient temperature within 25 ±10°C.
2) Switch ON the main circuit power.
3) Confirm that the cooling fan is rotating and the inverter is in stopped state.
4) Switch OFF the main circuit power.
5) Mount the multi-function keypad after five minutes having elapsed, switch ON the main circuit power again.
6) Select Menu 5 "Maintenance Information" in Programming mode and note the reading (relative capacitance (%) of the DC link bus capacitor).

---

①-2 Measuring the capacitance of the DC link bus capacitor (during power-off time under ordinary operating condition)

In general, the discharging condition of the DC link bus capacitor during a power-off time under the ordinary operating condition at the end user's installation is different from that under which the initial measurement is conducted at the time of factory shipment. As a result, the measured data for the DC link bus capacitor may not be updated. A method is provided, therefore, that allows you to measure the capacitance of the DC link bus capacitor during an ordinary power-off time by taking on (assuming) its discharging condition during a power-off time under the ordinary operation condition at the end user's installation.

Presented below is the procedure for taking on the discharging condition during a power-off time under the ordinary operating condition at the end user's installation.

---------- **Procedure for setting up measurement condition** ----------

1) Set function code H98 (Maintenance function) to enable the user to specify the judgment criteria for the service life of the DC link bus capacitor (Bit 3) (refer to function code H98).
2) Place the inverter in stopped state.
3) Place the inverter in the state of power-off under ordinary operating conditions.
4) Set both function codes H42 (Capacitance of DC Link Bus Capacitor) and H47 (Initial Capacitance of DC Link Bus Capacitor) to "0000."
5) Switch OFF the inverter.

   Measure the discharging time of the DC link bus capacitor and save the result in function code H47 (Initial Capacitance of DC Link Bus Capacitor).

   The condition under which the measurement has been conducted will be automatically collected and saved.

   During the measurement, " . . . . " will appear on the LED monitor.
6) Switch ON the inverter again. Confirm that H42 (Capacitance of DC Link Bus Capacitor) and H47 (Initial Capacitance of DC Link Bus Capacitor) hold right values. Move to Menu 5 "Maintenance Information" and confirm that the relative capacitance (ratio to full capacitance) is 100%.

   Note If the measurement has failed, "0001" is entered into both H42 and H47. Check whether there has been any mistake in operation and conduct the measurement again.

To change the settings back to the state at the time of factory shipment, set H47 (Initial Capacitance of DC Link Bus Capacitor) to "0002"; the original values will be restored.

Hereafter, each time the inverter is switched OFF, the discharging time of the DC link bus capacitor is automatically measured if the above condition is met.

Note The condition given above produces a rather large measurement error. If this mode gives you a lifetime alarm, set H98 (Protection/Maintenance Function) back to the factory defaults (Bit 3 (Select life judgment criteria of DC link bus capacitor) = 0) and conduct the measurement under the condition at the time of factory shipment.

② Electrolytic capacitor on the printed circuit board

Move to Menu 5 "Maintenance Information" in Programming mode and check the accumulated run time of the electrolytic capacitor on the printed circuit board. This value is calculated from the cumulative total number of hours a voltage has been applied on the electrolytic capacitor, adjusted with ambient temperature, and is used as the basis for judging whether it has reached its service life. The value is displayed on the LED monitor in units of 1000 hours.

③ Cooling fan

Select Menu 5 "Maintenance Information" and check the accumulated run time of the cooling fan. The inverter accumulates hours for which the cooling fan has run. The display is in units of 1000 hours. The accumulated time should be used just a guide since the actual service life will be significantly affected by the temperature and operation environment.

(2) Early warning of lifetime alarm

For the components listed in Table 7.3, you can get an early warning of lifetime alarm at one of the transistor output terminals ([Y1] to [Y4]) and the relay contact terminals ([Y5A] - [Y5C], and [30A/B/C]) as soon as any of the conditions listed under the "Judgment level" column has been exceeded.

Table 7.3 Criteria for Issuing a Lifetime Alarm

Parts to be replaced	Judgment level
DC link bus capacitor	85% or lower of the capacitance than that of the factory setting
Electrolytic capacitor on the printed circuit board	61000 hours or longer as accumulated run time
Cooling fan	Accumulated run time ≥ 40000 hours (estimated service life at the inverter's ambient temperature of 40 in 80 of the rated RMS current)

7.4 Measurement of Electrical Amounts in Main Circuit

Because the voltage and current of the power supply (input, primary circuit) of the main circuit of the inverter and those of the motor (output, secondary circuit) include harmonic components, the readings may vary with the type of the meter. Use meters indicated in Table 7.4 when measuring with meters for commercial frequencies.

The power factor cannot be measured by a commercially available power-factor meter that measures the phase difference between the voltage and current. To obtain the power factor, measure the power, voltage and current on each of the input and output sides and calculate in the following formula.

■ Three-phase input

$$\text{Power factor} = \frac{\text{Electric power (W)}}{\sqrt{3}\times\text{Voltage (V)}\times\text{Current (A)}} \times 100\ \%$$

Table 7.4 Meters for Measurement of Main Circuit

Item	Input (primary) side			Output (secondary) side			DC link bus voltage (P (+)-N (-))
Waveform	Voltage 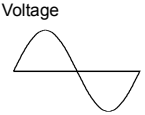		Current 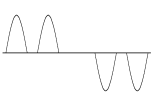	Voltage 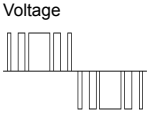		Current 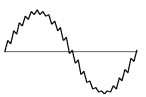	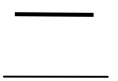
Name of meter	Ammeter A_R, A_S, A_T	Voltmeter V_R, V_S, V_T	Wattmeter W_R, W_T	Ammeter A_U, A_V, A_W	Voltmeter V_U, V_V, V_W	Wattmeter W_U, W_W	DC voltmeter V
Type of meter	Moving iron type	Rectifier or moving iron type	Digital AC power meter	Digital AC power meter	Digital AC power meter	Digital AC power meter	Moving coil type
Symbol of meter			—	—	—	—	

Note It is not recommended that meters other than a digital AC power meter be used for measuring the output voltage or output current since they may cause larger measurement errors or, in the worst case, they may be damaged.

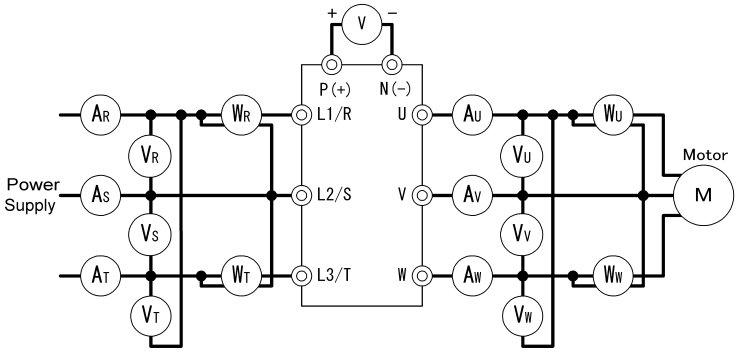

Figure 7.1 Connection of Meters

7.5 Insulation Test

Because an insulation test is made in the factory before shipment, avoid a Megger test.

If a Megger test is unavoidable, follow the procedure below. Because a wrong test procedure will cause breakage of the inverter, take sufficient care.

A dielectric strength test will cause breakage of the inverter similarly to the Megger test if the test procedure is wrong. When the dielectric strength test is necessary, contact your Fuji Electric representative.

(1) Megger test of main circuit

1) Use a 500 VDC Megger and shut off the main power supply without fail during measurement.
2) If the test voltage leaks to the control circuit due to the wiring, disconnect all the control wiring.
3) Connect the main circuit terminals with a common cable as shown in Figure 7.2.
4) The Megger test must be limited to across the common line of the main circuit and the ground terminal (⏚G).
5) 5 MΩ (1 MΩ for the EMC filter built-in type of inverters) or a larger value displayed at the Megger indicates a correct state. (The value is for a discrete inverter.)

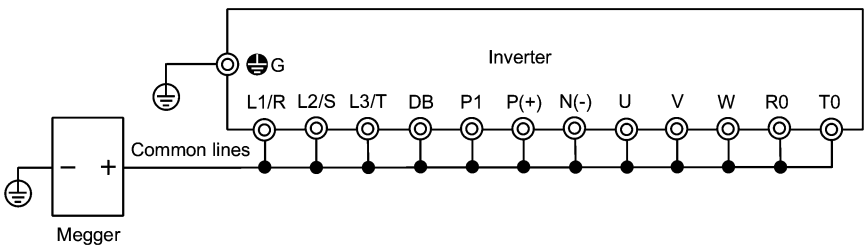

Figure 7.2 Megger Test

(2) Dielectric strength test of control circuit

Do not perform a Megger test or dielectric strength test for the control circuit. Prepare a high resistance range tester for the control circuit.

1) Disconnect all the external wiring from the control circuit terminals.
2) Perform a continuity test to the ground. 1 MΩ or a larger measurement indicates a correct state.

(3) Dielectric strength test of external main circuit and sequence control circuit

Disconnect all the inverter terminals so that the test voltage is not applied.

7.6 Inquiries about Product and Guarantee

(1) When making an inquiry

Upon breakage of the product, uncertainties, failure or inquiries, report the following information to your Fuji Electric representative.

1) Inverter type (Refer to Chapter 1, Section 1.1.)
2) SER No. (serial number of equipment) (Refer to Chapter 1, Section 1.1.)
3) Date of purchase
4) Inquiries (for example, point and extent of breakage, uncertainties, failure phenomena, and other circumstances)

(2) Product warranty

The term of product warranty is one year after the purchase or 18 months from the month and year of production specified on the nameplate, whichever comes first. However, the product will not be repaired free of charge in the following cases, even if the warranty term has not expired.

1) The cause includes incorrect usage or inappropriate repair or modification.
2) The product is used outside the standard specified range.
3) The failure is caused by dropping, damage or breakage during transportation after the purchase.
4) The cause is earthquake, fire, storm or flood, lightening, excessive voltage, or other types of disaster or secondary disasters.

Chapter 8 SPECIFICATIONS

8.1 Standard Models

Item					Specifications					
Type (FRN_ _ _LM1S-4☐)					5.5	7.5	11	15	18.5	22
Nominal applied motor *1				kW	5.5	7.5	11	15	18.5	22
Output ratings	Rated capacity *2)			kVA	10.2	14	18	24	29	34
	Rated voltage *3)			V	Three-phase, 380 V, 400 V/50 Hz, 380 V, 400 V, 440 V, 460 V/60 Hz					
	Rated current *4)			A	13.5	18.5	24.5	32.0	39.0	45.0
	Overload capability (10 Sec)			A	27.0	37.0	49.0	64.0	78.0	90.0
	Rated frequency			Hz]	50, 60 Hz					
Input ratings	Normal powered	Phases, voltage, frequency	Main power supply		Three-phase, 380 to 480 V, 50/60 Hz					
			Auxiliary control power input		Single-phase, 200 to 480 V, 50/60 Hz					
		Voltage/frequency variations			Voltage: +10 to -15% (Voltage unbalance: 2% or less *7)) Frequency: +5 to -5%					
		Rated current *5) A	(with DCR)		10.6	14.4	21.1	28.8	35.5	42.2
			(without DCR)		17.3	23.2	33	43.8	52.3	60.6
		Required power supply capacity *6)			7.4	10	15	20	25	30
	Battery powered	Main power supply			48 VDC or higher					
		Auxiliary control power input	Phases, voltage, frequency		Single-phase 200 to 480 V, 50/60 Hz					
			Voltage/frequency variations		Voltage: +10 to -15%, Frequency: +5 to -5%					
Braking	Braking time			s	30					
	Duty cycle (%ED)			%	50					
	Allowable minimum resistance			Ω	64	48	24	24	16	16
DC reactor (DCR)					Option					
Applicable safety standards					EN50178:1997 (under institution)					
Enclosure (IEC60529)					IP20					
Cooling method					Fan cooling					
Mass kg					5.6	5.7	7.5	11.1	11.2	11.7

*1) Fuji 4-pole standard motor

*2) Rated capacity is calculated by assuming the output rated voltage as 440 V.

*3) Output voltage cannot exceed the power supply voltage.

*4) Assuming the carrier frequency: 10 kHz, ambient temperature: less than 40°C, RMS output current of the inverter: 80% of the rated output current.

*5) Calculated under conditions specified by Fuji Electric, which are the power source capacity: 500 kVA, input impedance: 5%, power supply voltage: 400 VAC, and power source frequency: 50 Hz.

*6) Obtained when a DC reactor is used.

*7) $\text{Voltage unbalance (\%)} = \dfrac{\text{Max. voltage (V)} - \text{Min. voltage (V)}}{\text{Three-phase average voltage (V)}} \times 67$ (IEC61800-3 (5.2.3))

Note A box (☐) in the above table replaces C or E depending on the shipping destination.

8.2 Common Specifications

Item		Description	Remarks
Control system		Vector control with PG (for an asynchronous motor) Vector control with PG (for a synchronous motor)	
Speed control	Max. speed	120 Hz (3600 r/min for 4 pole motor) in the equivalent frequency Pulse encoder frequency: 100 kHz max., 15 kHz or more at the maximum speed	
	Controllable range	0 to 120 Hz (0 to 3600 r/min for 4 pole motor) in the equivalent frequency	
	Control accuracy	Analog setting: ±0.2% of max. speed (ambient temp. within 25 ±10°C) Multistep speed command/via-communications command: ±0.01% of max. speed (ambient temp. within -10 to +50°C)	
	Setting resolution	Analog setting: 1/1000 of max. speed Multistep speed command: 0.01 Hz in the equivalent inverter output frequency (99.99 Hz or less), 0.1 Hz (100.0 to 120.0 Hz) Via-communications command: 1/20000 at the max. speed or 0.01 Hz (fixed) in the equivalent inverter output frequency	
Control facility	Start/stop	Terminal command: Run forward/reverse, coast-to-stop, external alarm, reset alarm, etc.	
		Link operation: Operation by RS485 or CAN bus communications link	
		Key operation: Start and stop with FWD / REV / STOP keys. Note Before to proceed to running with these keys switch the mode from Remote to Local using the multi-function keypad.	
	Carrier frequency	Data: Variable within 5 to 15 kHz Note The carrier frequency may drop automatically according to the ambient temperature or output current to protect the inverter. This protective operation can be canceled by function code H98.	
	Speed command	Multistep speed command source: Combination of 3 terminal command (8 steps)	
		Analog input: Can be set with external voltage/current input. • 0 to ±10 VDC/0 to ±100% (terminal [12], [V2]) • 4 to 20 mA DC/0 to 100% (terminal [C1])	
		Link operation: Available for RS485 and CAN bus communications link.	
		Key operation: Can be set with ∧ / ∨ keys. Note Before to proceed to running with these keys switch the mode from Remote to Local using the multi-function keypad.	
	Features and commands	**Operation**: • Force to stop, Soft start • Concurrent application of S-curved accel./decel. pattern + Accel./decel. time + Multistep frequency commands • Continue-to-run at the stop frequency • Torque control • Creep-less operation • Buttery drivable • Unbalance load compensation **Customizing feature**: • Run command/detected speed assented timer • Multistep speed command/detected speed assented timer • Digital input/output logic inversion • Disable accel./decel. Processing function • Command source format switching of the speed controller • Digital/analog torque biasing **Miscellaneous**: • Feed-forward compensation of the speed controller • Oscillation suppression observer • Motor parameter tuning • Magnet pole angle offset tuning • Password protection and etc.	
Environ-ment		Refer to Chapter 1, Section 1.4 "Storage Environment" and Chapter 2, Section 2.1 "Operating Environment."	

8.3 Terminal Specifications

8.3.1 Terminal functions

For details about the main and control circuit terminals, refer to Chapter 2, Section 2.3.6 and Section 2.3.7 (Table 2.10), respectively.

8.3.2 Basic wiring diagram

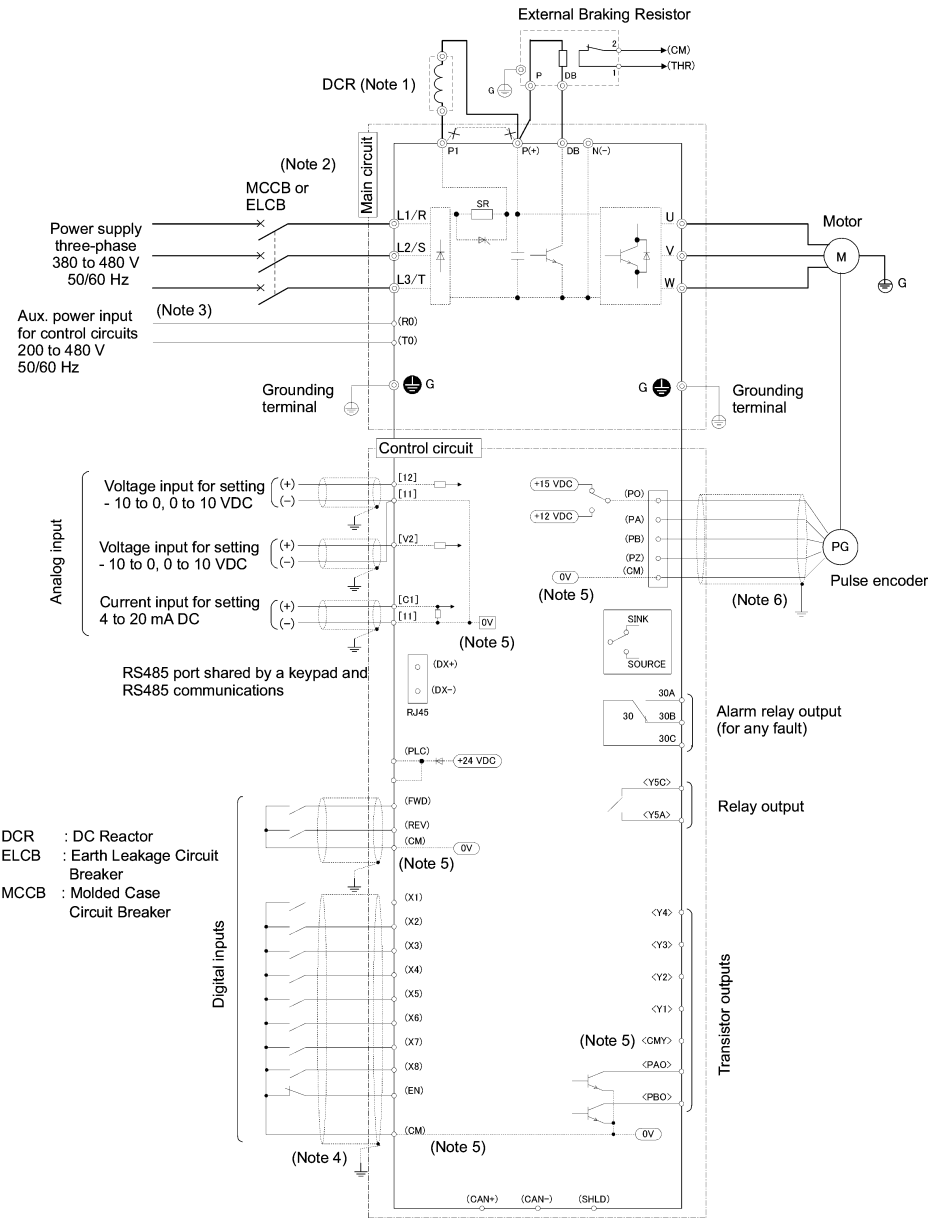

(Note 1) When connecting a DC reactor (DCR), first remove the short bar between terminals P1 and P(+).

(Note 2) To protect wiring, insert a molded case circuit breaker (MCCB) or an earth leakage circuit breaker (ELCB) (with overcurrent protection) of the type recommended for the inverter between the commercial power supply and the inverter. Do not use a circuit breaker with a capacity exceeding the recommended capacity.

(Note 3) Connect this pair of wires to terminals [R0] and [T0] if you want the inverter to stay in standby state, with only its control circuit being active, when the main circuit power supply is open (cut off). Without this pair of wires connected to these terminals, you can still run the inverter as long as the main wires of the commercial power supply to the main circuit are properly connected. Connect terminal [R0] and [T0] with the output side on earth leakage circuit breaker when you connect earth leakage circuit breaker. When you connect terminal [R0] and [T0] with the input side of on earth leakage circuit breaker, an earth leakage circuit breaker malfunctions. Connect insulation transformer or supplementary point of contact B with the position shown in the figure below whenever you connect [R0] and [T0] with the input side of an earth leakage circuit breaker.

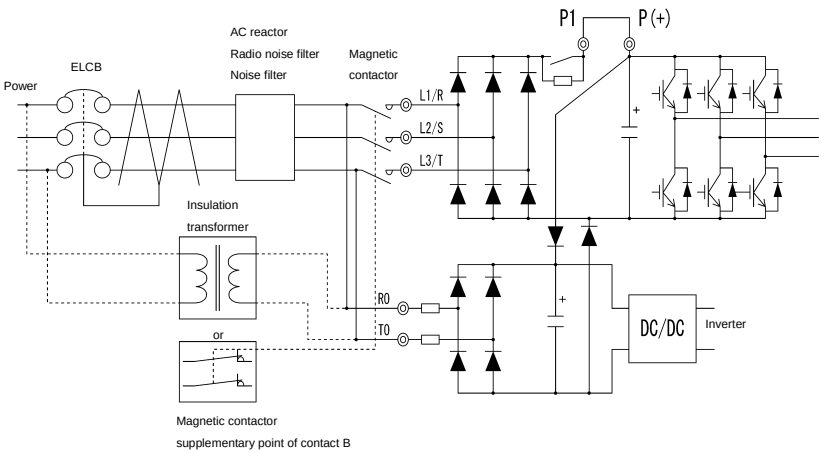

(Note 4) For the wiring of the control circuit, use shielded or twisted wires. When using shielded wires, connect the shields to earth. To prevent malfunction due to noise, keep the control circuit wires as far away as possible from the main circuit wires (recommended distance: 10 cm or longer), and never put them in the same wire duct. Where a control circuit wire needs to cross a main circuit wire, route them so that they meet at right angles.

(Note 5) Common terminals [11], [CM] and [CMY] for the control input/output circuits are insulated each other.

(Note 6) Use a shielded sheath cable to wire the control signals. Process and terminate correctly the shielded sheath ends according to wiring state and specifications of the pulse encoder or host equipment. The figure in this section illustrates an example for the cable's shielded sheath grounding where the shielded sheath end is connected to the grounding wire of the motor and another end is opened at the inverter side. If the inverter malfunctions due to noises picked up by the signal cable, connecting the inverter end of the shielded sheath to the inverter's [CM] terminal may reduce the noise affection. When the wiring between the encoder and the inverter is long, the allophone and the torque ripple might be generated because the signal from the encoder malfunctions by interfering with A phase and B phase. In this case, please execute measures such as; wiring shorter cable, cable of smaller electrostatic capacity, etc.

8.4 External Dimensions

8.4.1 Standard models

Unit: mm

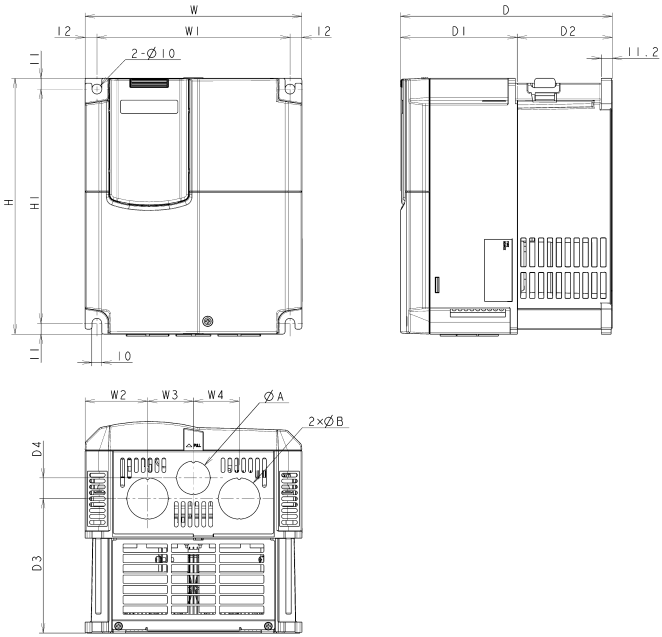

Power supply voltage	Type	Dimensions (mm)													
		W	W1	W2	W3	W4	H	H1	D	D1	D2	D3	D4	ϕA	ϕB
Three-phase 400 V	FRN5.5LM1S-4☐	220	196	63.5	46.5	46.5	260	238	215	118.5	96.5	136.7	21	34	42
	FRN7.5LM1S-4☐														
	FRN11LM1S-4☐														
	FRN15LM1S-4☐	250	226	67	58	58	400	378		85	130	166.2	2		
	FRN18.5LM1S-4☐														
	FRN22LM1S-4☐														

Note A box (☐) in the above tables replaces C, E or A depending on the shipping destination.

8.5 Protection Features

Name		Description		LED monitor displays *1	Alarm output [30A/B/C]
Overcurrent protection		The inverter is stopped for protection against overcurrent caused by an overload.	During acceleration	0c1	Yes
Short circuit protection		The inverter is stopped for protection against overcurrent caused by a short circuit in the output circuit.	During deceleration	0c2	
Grounding fault protection		The inverter is stopped for protection against overcurrent caused by a grounding fault in the output circuit. If the power supply is turned on with the grounding fault, the protection may be invalidated.	During running at constant speed	0c3	
Overvoltage protection		An excessive voltage (400V series: DC800V) in the DC link circuit is detected and the inverter is stopped. If a remarkably large voltage is applied by mistake, the protection cannot be made.	During acceleration	0u1	Yes
			During deceleration	0u2	
			During running at constant speed (Stopped)	0u3	
Undervoltage protection		Stops the inverter output when the DC link bus voltage drops below the undervoltage level (400 VDC). When the inverter is driven by a battery power, however, it disables an undervoltage alarm detection and is to output no alarm signal.		lu	Yes*2
Input phase loss protection		Detects input phase loss, stopping the inverter output. This function prevents the inverter from undergoing heavy stress that may be caused by input phase loss or inter-phase voltage unbalance and may damage the inverter. If connected load is light or a DC reactor is connected to the inverter, this function will not detect input phase loss if any.		lin	Yes*2
Overheating protection		The temperature of the heat sink in the event of cooling fan trouble and overload is detected to stop the inverter.		0h1	Yes
		The temperature inside the inverter unit in the event of cooling fan trouble and overload is detected to stop the inverter.		0h3	Yes
External alarm input		With the digital input signal ***THR***, the inverter is stopped as for an alarm.		0h2	Yes
Overload protection		The temperature inside the IGBT is calculated from the detection of output current and internal temperature, to shut off the inverter output.		0lu	Yes
Motor protection	Electronic thermal	The inverter is stopped upon an electronic thermal function setting to protect the motor. The standard motor and the inverter motor are protected in the range of all the frequencies. The operation level and thermal time constant can be set.		0l1	Yes
	PTC thermistor	A PTC thermistor input stops the inverter to protect the motor. The PTC thermistor is connected between terminals V2 and 11 to set switch on the control PC board and function codes.		0h4	Yes

*1 When the inverter is equipped with the multi-function keypad, it displays the alarm letters on the LED indicator of the keypad.

*2 This alarm [30A/B/C] may not be output depending upon the data setting of the function code.

Name	Description		LED monitor displays *1	Alarm output [30A/B/C]
Alarm relay output (for any alarm)	- The inverter outputs a relay contact signal when the inverter issues an alarm and stops the inverter output. < Alarm Reset > The alarm stop state is reset by pressing the RESET key on the multi-function keypad (option) or by the digital input signal ***RST***.		—	Yes
Memory error	Data is checked upon power-on and writing to detect any fault in the memory and to stop the inverter if any.		er1	Yes
Keypad communi-cation error	Multi-function keypad (option) is used to detect a communication fault between the keypad and inverter main body during operation and so on and stop the inverter if any.		er2	Yes
CPU error	Detect a CPU error caused by noise and so on and stops the inverter.		er3	Yes
Option communi-cation error	When PG option card is used, a fault of communication with the inverter main body is detected to stop the inverter.		er4	Yes
Option error	When each option card is used, the option side detects a fault to stop the inverter.		er5	Yes
Operation error	Brake status error	If the braked status input ***BRKE*** does not follow the brake command ***BRKS***, the inverter stops.	er6	Yes
	Speed comman d error	If same speed data is set up in any of multistep speed commands (L11 to L18) the inverter stops.		
Tuning error	When tuning failure, interruption, or any fault as a result of tuning is detected while tuning the motor constant, the inverter is stopped.		er7	Yes
RS485 communicatio n error	When the connection port of the keypad is connected via RS485 communication to the network to detect a communication error, the inverter is stopped to display the error.		er8	Yes
Option hardware error	When using the option card upon an error in the option or due to a loose mounting of the card being detected the inverter stops itself.		erh	Yes
EN terminal circuit error	The inverter detects an error on the EN terminal circuit, and stops itself. Note that due to the internal circuit error, the reset feature of inverter itself cannot clear the alarm		ecf	Yes
Broken wiring in the PG	The inverter detects a broken wiring connection in the pulse encoder and stops itself. This feature takes effect for some models of the PG interface card.		p9	Yes

"—": Not applicable.

*1 When the inverter is equipped with the multi-function keypad, it displays the alarm letters on the LED indicator of the keypad.

Name	Description	LED monitor displays *1	Alarm output [30A/B/C]
CAN bus Communi-cation error	An abnormal communication with the main body of the inverter is detected when the CAN bus is used, and the inverter is stopped.	ert	Yes
Overspeed prevention	If the motor has run at 120% or more of the maximum rated speed, the inverter stops.	0s	Yes
Speed mismatching (Out of speed control)	If difference between the reference speed and motor speed (ASR feedback) increases too much large to keep control, and this situation continues for the specified time, then the inverter stops.	ere	Yes
Retry	When the motor is tripped and stopped, this function automatically resets the tripping state and restarts operation. (The number of retries and the length wait before resetting can be set.)	—	—
Failsafe feature	Whenever the EN terminal circuit that should be assigned to any digital inputs (X1 to X8) turns off, the inverter shuts down its main power circuit to secure to stop the output.	—	—
Alarm relay output (for any fault)	The inverter outputs a relay contact signal when the inverter issues an alarm and stops the inverter output. The alarm stop state is reset by the digital input signal ***RST***.	—	Yes
Surge protection	The inverter is protected against surge voltage intruding between the main circuit power line and ground.	—	—
Momentary power failure protection	A protective function (inverter stoppage) is activated upon a momentary power failure for 15msec or longer.	—	—

"—": Not applicable.

*1 When the inverter is equipped with the multi-function keypad, it displays the alarm letters on the LED indicator of the keypad.

Chapter 9 LIST OF PERIPHERAL EQUIPMENT AND OPTIONS

The table below lists the main peripheral equipment and options that are connected to the FRENIC-Lift. Use them in accordance with your system requirements.

<table>
<tr><th></th><th>Name of peripheral equipment</th><th>Function and application</th></tr>
<tr><td rowspan="2">Main peripheral equipment</td><td>Molded case circuit breaker (MCCB)

Earth leakage circuit breaker (ELCB)*

* with overcurrent protection</td><td>MCCBs are designed to protect the power circuits between the power control board and inverter's main terminals (L1/R, L2/S and L3/T) from overload or short-circuit which in turn prevents secondary disasters caused by the inverter malfunctioning.

RCDs/ELCBs function in the same way as MCCBs. Use the MCCBs and RCDs/ELCBs that satisfy the recommended rated current listed below.
<table>
<tr><th rowspan="2">Input power source (3-phase)</th><th rowspan="2">Applicable motor rating (kW)</th><th rowspan="2">Inverter type</th><th colspan="2">Rated current of MCCB and ELCB (A)</th></tr>
<tr><th>w/ DCR</th><th>w/o DCR</th></tr>
<tr><td rowspan="6">400 V</td><td>5.5</td><td>FRN5.5LM1S-4☐</td><td>15</td><td>30</td></tr>
<tr><td>7.5</td><td>FRN7.5LM1S-4☐</td><td>20</td><td>40</td></tr>
<tr><td>11</td><td>FRN11LM1S-4☐</td><td>30</td><td>50</td></tr>
<tr><td>15</td><td>FRN15LM1S-4☐</td><td rowspan="2">40</td><td>60</td></tr>
<tr><td>18.5</td><td>FRN18.5LM1S-4☐</td><td>75</td></tr>
<tr><td>22</td><td>FRN22LM1S-4☐</td><td>50</td><td>100</td></tr>
</table>
Note A box (☐) in the above table replaces C, E or A depending on the shipping destination.
Select the MCCB or RCD/ELCB with appropriate breaking capacity according to the power supply capacity.

⚠ WARNING
When connecting the inverter to the power supply, add a recommended molded case circuit breaker and earth leakage circuit breaker* in the path of power supply. Do not use the devices with the rated current out of the recommenced range.
*With overcurrent protection

Fire could occur.</td></tr>
<tr><td>Magnetic contactor (MC)</td><td>Insert an MC in the power source side of the inverter in order to:
1) Forcibly cut off the inverter from the power source (generally, commercial/factory power lines) with the protection function built into the inverter, or with the terminal signal line.
2) Stop the inverter operation in an emergency when the inverter cannot interpret the stop command due to internal/external circuit failures.
3) Cut off the inverter from the power source when the MCCB inserted in the power source side cannot cut it off for maintenance or inspection purpose. If you are to use the MC for this purpose only, it is recommended that you use an MC capable of turning the MC ON/OFF manually.

Note1: When your system requires the motor(s) driven by the inverter to be started/stopped with the MC, the frequency of the starting/stopping operation should be once or less per hour. The more frequent the operation, the shorter operation life of the MC and capacitor/s used in the DC link bus due to thermal fatigue caused by the frequent charging of the current flow. If this is not necessary, start/stop the motor with the terminal commands ***FWD*** and ***REV***, or with the keypad.

Note2: Install an MC in compliance with regulations that apply to the system.</td></tr>
</table>

	Name of option	Function and application
Main option	DC reactors (DCL)	A DCL is mainly used for co-operative power supply and for supplied power-factor correction (for reducing harmonic components). 1) For co-operative power supply - Use a DCR when the capacity of a power supply transformer exceeds 500 kVA and is 10 times or more than the rated inverter capacity. In this case, the percentage-reactance of the power source decreases, and harmonic components and their peak levels increase. These factors may break rectifiers or capacitors in the DC link bus of inverter, or decrease the capacitance of the capacitor (which can shorten the inverter's service life). - Also use a DCR when there are thyristor-driven loads or when phase-advancing capacitors are being turned ON/OFF. 2) For supplied power-factor correction (harmonic component reduction) Generally a capacitor is used to correct the power factor of the load, however, it cannot be used in a system that includes an inverter. Using a DCR increases the reactance of inverter's power source so as to decrease harmonic components on the power source lines and correct the power factor of inverter. Using a DCR corrects the input power factor to approximately 86 to 90%. **Note:** At the time of shipping, a short bar is connected across the terminals P1 and P (+) on the terminal block. Remove the short bar when connecting a DCR.
	Ferrite ring reactors for reducing radio frequency noise (ACL)	An ACL is used to reduce radio noise emitted by the inverter. An ACL suppresses the outflow of high frequency harmonics caused by switching operation inside the inverter for the power supply (primary) lines. Pass the power supply lines together through the ACL for 4 turns (coiled 3 times). If wiring length between the inverter and motor is less than 20 m, insert an ACL to the power supply (primary) lines; if it is more than 20 m, insert it to the power output (secondary) lines of the inverter.
	AC Reactor (ACR)	Use an ACR to protect the inverter operations from the power supply voltage waveform distortion or surge disturbance issued by apparatuses connected to same power supply bus lines. In a DC link bus system (using terminals P(+) and N(-)), the AC reactor protects the inverter against damage caused by unbalance in current.

	Name of option	Function and application
Options for Operation and Communications	Multi-function keypad	Multi-function keypad (option) allows you to monitor the status of the inverter including voltage, current, and input power, as well as to set various function code data in a conversational mode. Equipped with a liquid crystal display (LCD). Also this allows you to copy function code data from one FRENIC-Lift inverter to another.
	Extension cable for remote keypad operation	The extension cable connects the RS485 communications port (standard) with a keypad or an RS485-USB converter. Three lengths are available: 5 m, 3 m and 1 m.
	PG option card for driving of a synchronous motor with the parallel encoder	The card helps the inverter drive a synchronous motor equipped with absolute positioning type encoder that outputs magnet pole angle in a 4 bits gray code or 3 bits code (for U, V, and W phases) format.
	PG option card for driving of a synchronous motor with the serial encoder	The card helps the inverter drive a synchronous motor equipped with absolute positioning type encoder that outputs mechanical angle in the serial interface compatible to EnDat 2.1.
	Inverter support loader software	Inverter support loader software, Windows GUI (Graphics User Interface) based, that makes setting up of function codes easy.
Other peripheral equipment	Surge absorbers	A surge absorber suppresses surge currents and noise from the power lines to ensure effective protection of your power system from the malfunctioning of the magnetic contactors, mini-relays and timers.
	Surge killers	A surge killer eliminates surge currents induced by lightening and noise from the power supply lines. Use of a surge killer is effective in preventing the electronic equipment, including inverters, from damage or malfunctioning caused by such surges and/or noise.
	Arresters	An arrester suppresses surge currents and noise invaded from the power supply lines. Use of an arrester is effective in preventing electronic equipment, including inverters, from damage or malfunctioning caused by such surges and/or noise.
Other options	Mounting adapters	FRENIC-Lift series of inverters can be installed to your system enclosure or equipment using mounting adapters that utilize the mounting holes used for conventional inverters of FRENIC5000G11 (11 kW) series.
	Attachment for external cooling	This adapter allows you to mount your FRENIC-Lift series of inverters on the panel in such a way that the heat sink assembly may be exposed to the outside. Using this adapter greatly reduces heat radiated or spread inside your enclosure.

Designed for Elevating Machinery

FRENIC-Lift

Instruction Manual

First Edition, February 2005

Second Edition, October 2005

Fuji Electric FA Components & Systems Co., Ltd.

The purpose of this instruction manual is to provide accurate information in handling, setting up and operating of the FRENIC-Lift series of inverters. Please feel free to send your comments regarding any errors or omissions you may have found, or any suggestions you may have for generally improving the manual.

In no event will Fuji Electric FA Components & Systems Co., Ltd. be liable for any direct or indirect damages resulting from the application of the information in this manual.

Fuji Electric FA Components & Systems Co., Ltd.

Mitsui Sumitomo Bank Ningyo-cho Bldg., 5-7, Nihonbashi, Odemma-cho, Cyuo-ku, Tokyo, 103-0011, Japan
Phone: +81 3 5847 8011 Fax: +81 3 5847 8172
URL http://www.fujielectric.co.jp/fcs/

2005-X (XXX/XXX) CM